8FG10
8FD10

8FD25

MAIN VEHICLE SPECIFICATIONS

(January 2016)

1	Manufacturer				TOYOTA		TOYOTA	
2	Model				**30-8FG10**	**32-8FG10**	**60-8FD10**	**62-8FD10**
3	Load Capacity			kg	1000		1000	
4	Load Center			mm	500		500	
5	Power Type				Gasoline		Diesel	
6	Operator Position				Rider Seated		Rider Seated	
7	Tire Type		Front/Rear		Pneumatic		Pneumatic	
8	Wheels (x = driven)		Front/Rear		2x/2		2x/2	
9	Maximum Fork Height (MFH)			mm	3000		3000	
10	Free Lift			mm	140		140	
13	Fork Size		T x W x L	mm	30x100x1070		30x100x1070	
	Fork Spread (Outside)		MAX./MIN.	mm	920/200		920/200	
14	Tilt Range		FWD/BWD	deg	7/10		7/10	
15	Length to Fork Face			mm	2240		2240	
16	Overall Width			mm	1045		1045	
17	Mast Lowered Height			mm	1970		1970	
18	Mast Extended Height			mm	4220		4220	
19	Overhead Guard Height			mm	2080		2080	
21	Turning Radius (Outside)			mm	1910		1910	
22	Load Distance (Centerline of front axle to front face of forks)			mm	400		400	
	Rear Overhang			mm	355		355	
23	Basic Right Angle Stacking Aisle Width (Add load length and clearance)			mm	2310		2310	
24	Speeds	Travel, Max. (FWD/RVS)	Full Load	km/h	19.0/19.0	18.5/18.5	17.5/17.5	17.5/17.5 <16.5/16.5>
			No Load	km/h	19.5/19.5	19.0/19.0	18.0/18.0	18.0/18.0 <17.0/17.0>
25		Lifting	Full Load	mm/sec	610	610	650	650<650>
			No Load	mm/sec	660	660	675	675<675>
26		Lowering	Full Load	mm/sec	500	500	500	500<500>
			No Load	mm/sec	550	550	550	550<550>
28	Max. Drawbar Pull		Full Load	N (kg)	16800 (1710)	19500 (1990)	19500 (1990)	19500 (1990) <18300(1870)>
			No Load	N (kg)	7500 (760)	6800 (690)	7500 (760)	7500 (760) <7500(760)>
	Max. Drawbar Pull at 1.5km/h *		Full Load	N (kg)	—	17300 (1760)	—	17600(1790) <16000 (1630)>
29	Gradeability at 1.5 km/h *		Full Load	% (tanθ)	—	45	—	45<42>
30	Max. Gradeability *		Full Load	% (tanθ)	45	45	45	45<45>
			No Load	% (tanθ)	28	28	28	28<28>
32	Total Weight			kg	2070		2170	
33	Weight Distribution	Full Load	Front	kg	2670		2720	
			Rear	kg	400		450	
34		No Load	Front	kg	1060		1110	
			Rear	kg	1010		1060	
35	Tires	Number	Front/Rear		2/2		2/2	
36		Size	Front		6.00-9-10PR (I)		6.00-9-10PR (I)	
37			Rear		5.00-8-8PR (I)		5.00-8-8PR (I)	
38	Wheelbase			mm	1485		1485	
39	Tread		Front	mm	885		885	
			Rear	mm	895		895	
	Backrest Height			mm	1220		1220	
	Overhead Guard Clearance			mm	1055		1055	
	Counterweight Height			mm	1070		1070	
	Drawbar Pin Center Height			mm	285		285	
	Step Height/Floor Height			mm	370/605		370/605	
40	Underclearance	Min. <Mast>		mm	80		80	
41	(Full Load)	Center of Wheelbase		mm	110		110	
	Grade Clearance	Frame/Counterweight		% (tanθ)	41/58		41/58	
42	Brake	Service (Foot)			Hydraulic		Hydraulic	
43		Parking			Hand	Foot	Hand	Foot
45	Battery	Voltage/Capacity (5HR)		V/AH	12/27		12/55	
49	Internal Combustion Engine	Make/Model			TOYOTA/4Y		TOYOTA/1DZ-II[1DZ-III] ** <1DZ-III>***	
50		Rated Power/r.p.m.		kW (JIS ps)	40/2400 (54/2400)		40(55)/2400[38(52)/2400]<36(49)/2400>	
51		Rated Torque/r.p.m.		N-m (JIS kg-m)	162/1800 (16.5/1800)		167 (17.0) /1600 [157 (16.0) /2300] <150(15.3)/2000>	
52		Number of Cylinder			4		4	
		Piston Displacement		cc	2237		2486	
		Fuel Tank Capacity		liter	45		45	
55	Transmission	Type			Manual	Powershift	Manual	Powershift
		Stage	FWD/RVS		2/2	1/1	2/2	1/1
57	Operating Pressure	For Attachments		Mpa (kg/cm^2)	11.8 (120)		11.8 (120)	

NOTE: * Computed values.
** 1DZ-II: Non-road Mobile Machinery (97/68/EC; Stage II) EPA Non-road Diesel Emissions (40 CFR Part 89; Interim Tier 2).
1DZ-III: Non-road Mobile Machinery (97/68/EC; Stage IIIA) EPA Non-road Diesel Emissions (40 CFR Part 1039; Interim Tier 4).
*** 1DZ-III:Non-road Mobile Machinery (GB20891-2014; StageIII,IV)

DIMENSIONAL DRAWINGS

(February 2011)

Unit: mm

8FG/8FD10

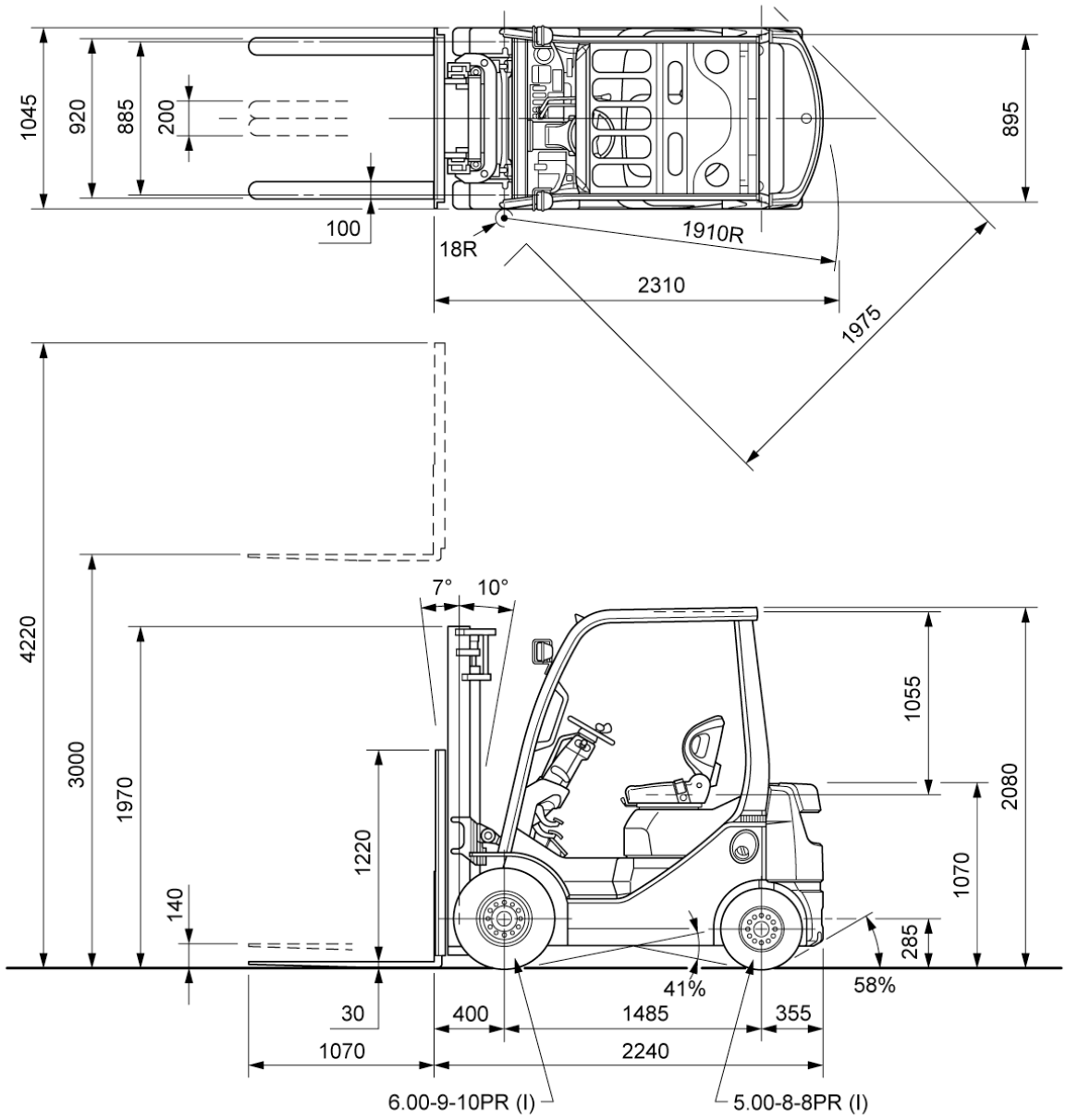

UNDERCLEARANCE

Mast (Full Load)---------- 80
Drive Axle (Full Load)---------- 80
Steer Axle (No Load)---------- 130
Center of Wheelbase (Full Load)--------- 110
Counterweight (No Load)---------- 125

SPECIAL TREAD

(February 2011)

Model		8FG/8FD10		
Front Tire	Single/Dual	Single	Single	Dual
Front Tire Size		6.00-9-10PR (I)	6.50-10-10PR (I)	4.50-12-8PR (I)
Overall Width	mm	1045	1070	1290
Tread, Front	mm	885	885	1010

SPECIAL MAST

(January 2016)

Wide Visible Full-Free Lift Two-Stage Mast (FV), Wide Visible Full-Free Lift Three-Stage Mast (FSV)

Model				8FG10	8FD10 <36kW>	8FG10	8FD10 <36kW>
Type of Mast				FV		FSV	
PERFORMANCE							
Speeds	Lifting	Full Load	mm/sec	565	600<580>	570	620<590>
		No Load	mm/sec	610	640<610>	615	650<630>
	Lowering	Full Load	mm/sec	480		480	
		No Load	mm/sec	420		450	
DIMENSIONS							
Load Distance (Centerline of front axle to front face of forks)			mm	400		420	

RATED CAPACITIES

(April 2009)

8FG/8FD10

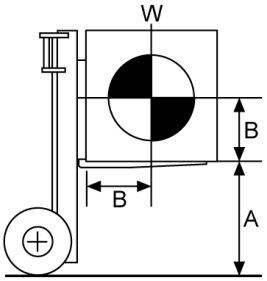

A: Max. Fork Height
B: Load Center
W: Capacity

V, FV Mast (PN or PSC)

Unit: kg (**W**)

A (mm)		4000	4500	5000
B (mm)	500	1000	950	950
	600	900	850	850
	700	810	770	770
	800	750	710	710
	900	690	650	650
	1000	640	610	610
	1100	600	570	570
	1200	560	530	530

FSV Mast (PN)

Unit: kg (**W**)

A (mm)		3700	4000	4300	4500	4700	5000	5500	6000	6500	7000
B (mm)	500	950	900	900	900	900	850	850	700 [800]	— [700]	— [650]
	600	850	810	810	810	810	760	760	630 [720]	— [630]	— [580]
	700	780	740	740	740	740	690	690	570 [650]	— [570]	— [530]
	800	710	670	670	670	670	640	640	520 [600]	— [520]	— [490]
	900	660	620	620	620	620	590	590	480 [550]	— [480]	— [450]
	1000	610	580	580	580	580	550	550	450 [510]	— [450]	— [420]
	1100	570	540	540	540	540	510	510	420 [480]	— [420]	— [390]
	1200	540	510	510	510	510	480	480	390 [450]	— [390]	— [370]

[ ] for dual tire models (PN or PSC).

FSV Mast (PSC)

Unit: kg (**W**)

A (mm)		6000
B (mm)	500	800
	600	720
	700	650
	800	600
	900	550
	1000	510
	1100	480
	1200	450

MAST SPECIFICATIONS & RATED CAPACITIES *(April 2009)*

Wide Visible Mast (V), Wide Visible Full-Free Lift Two-Stage Mast (FV), Wide Visible Full-Free Lift Three-Stage Mast (FSV)

8FG/8FD10

Mast Type	Maximum Fork Height	Overall Height			Free Lift		Single Tire				Dual Tire		
		Lowered	Extended		Without Load Backrest	With Standard Load Backrest	Tilt Range		Load Capacity at 500 mm LC		Tilt Range		Load Capacity at 500 mm LC
			Without Load Backrest	With Standard Load Backrest			FWD	BWD	Pneumatic Tire	Pneumatic-Shaped Cushion Tire	FWD	BWD	PneumaticTire/ Pneumatic-Shaped Cushion Tire
	mm	mm	mm	mm	mm	mm	deg	deg	kg	kg	deg	deg	kg
V	2700	1820*	3150**	3920	140	140	7	10	1000	1000	7	10	1000
	3000	1970*	3450**	4220	140	140	7	10	1000	1000	7	10	1000
	3300	2120*	3750**	4520	140	140	7	10	1000	1000	7	10	1000
	3500	2220*	3950**	4720	140	140	7	10	1000	1000	7	10	1000
	3700	2380*	4150**	4920	140	140	7	10	1000	1000	7	10	1000
	4000	2570*	4450**	5220	140	140	7	10	1000	1000	7	10	1000
	4500	2820*	4950**	5720	140	140	7	5	950	950	7	10	950
	5000	3070*	5450**	6220	140	140	7	5	950	950	7	5	950
FV	2870***	1905*	3440	4090	1335*	685*	7	10	1000	1000	7	10	1000
	3000	1970*	3570	4220	1400*	750*	7	10	1000	1000	7	10	1000
	3300	2120*	3870	4520	1550*	900*	7	10	1000	1000	7	10	1000
	3500	2220*	4070	4720	1650*	1000*	7	10	1000	1000	7	10	1000
	3700	2380*	4270	4920	1810*	1160*	7	10	1000	1000	7	10	1000
	4000	2570*	4570	5220	2000*	1350*	7	10	1000	1000	7	10	1000
FSV	3700	1770*	4240	4920	1230*	550*	7	5	950	950	7	5	950
	4000	1870*	4540	5220	1330*	650*	7	5	900	900	7	5	900
	4300	1970*	4840	5520	1430*	750*	7	5	900	900	7	5	900
	4500	2040*	5040	5720	1500*	820*	7	5	900	900	7	5	900
	4700	2120*	5240	5920	1580*	900*	7	5	900	900	7	5	900
	5000	2220*	5540	6220	1680*	1000*	7	5	850	850	7	5	850
	5500	2380*	6040	6720	1840*	1160*	7	5	850	850	7	5	850
	6000	2570*	6540	7220	2030*	1350*	7	5	700	800	7	5	800
	6500	2820*	7040	7720	2280*	1600*	—	—	—	—	7	5	700
	7000	3070*	7540	8220	2530*	1850*	—	—	—	—	7	5	650

NOTE: Height of standard load backrest is 1220 mm.
* with optional tire size; 6.50-10-10PR (I), plus 25 mm.
** with A4 piping, plus 155 mm.
*** Set only to a Russian specification.

8FG15
8FD15

MAIN VEHICLE SPECIFICATIONS *(January 2016)*

1	Manufacturer				TOYOTA		TOYOTA	
2	Model				**30-8FG15**	**32-8FG15**	**60-8FD15**	**62-8FD15**
3	Load Capacity			kg	1500		1500	
4	Load Center			mm	500		500	
5	Power Type				Gasoline		Diesel	
6	Operator Position				Rider Seated		Rider Seated	
7	Tire Type		Front/Rear		Pneumatic		Pneumatic	
8	Wheels (x = driven)		Front/Rear		2x/2		2x/2	
9	Maximum Fork Height (MFH)			mm	3000		3000	
10	Free Lift			mm	145		145	
13	Fork Size		T x W x L	mm	35x100x1070		35x100x1070	
	Fork Spread (Outside)		MAX./MIN.	mm	920/200		920/200	
14	Tilt Range		FWD/BWD	deg	6/11		6/11	
15	Length to Fork Face			mm	2285		2285	
16	Overall Width			mm	1070		1070	
17	Mast Lowered Height			mm	1995		1995	
18	Mast Extended Height			mm	4220		4220	
19	Overhead Guard Height			mm	2080		2080	
21	Turning Radius (Outside)			mm	1990		1990	
22	Load Distance (Centerline of front axle to front face of forks)			mm	405		405	
	Rear Overhang			mm	395		395	
23	Basic Right Angle Stacking Aisle Width (Add load length and clearance)			mm	2395		2395	
24	Speeds	Travel, Max. (FWD/RVS)	Full Load	km/h	19.0/19.0	18.5/18.5	19.0/19.0	19.0/19.0 <18.0/18.0>
			No Load	km/h	19.5/19.5	19.0/19.0	19.5/19.5	19.5/19.5 <18.5/18.5>
25		Lifting	Full Load	mm/sec	610	610	650	650<650>
			No Load	mm/sec	660	660	675	675<675>
26		Lowering	Full Load	mm/sec	500	500	500	500<500>
			No Load	mm/sec	550	550	550	550<550>
28	Max. Drawbar Pull		Full Load	N (kg)	15500 (1580)	17500 (1790)	15500 (1580)	17600(1790) <16600 (1690)>
			No Load	N (kg)	6900 (700)	6300 (640)	7000 (710)	7000 (710) <7000 (710)>
	Max. Drawbar Pull at 1.5km/h *		Full Load	N (kg)	—	15700 (1600)	—	16000(1630) <14400(1470)>
29	Gradeability at 1.5 km/h *		Full Load	% (tanθ)	—	45	—	45<42>
30	Max. Gradeability *		Full Load	% (tanθ)	45	45	44	44<45>
			No Load	% (tanθ)	22	22	22	22<22>
32	Total Weight			kg	2430		2530	
33	Weight Distribution	Full Load	Front	kg	3430		3480	
			Rear	kg	500		550	
34		No Load	Front	kg	1010		1060	
			Rear	kg	1420		1470	
35	Tires	Number	Front/Rear		2/2		2/2	
36		Size	Front		6.50-10-10PR (I)		6.50-10-10PR (I)	
37			Rear		5.00-8-8PR (I)		5.00-8-8PR (I)	
38	Wheelbase			mm	1485		1485	
39	Tread		Front	mm	885		885	
			Rear	mm	895		895	
	Backrest Height			mm	1220		1220	
	Overhead Guard Clearance			mm	1055		1055	
	Counterweight Height			mm	1065		1065	
	Drawbar Pin Center Height			mm	285		285	
	Step Height/Floor Height			mm	395/635		395/635	
40	Underclearance	Min. <Mast>		mm	100		100	
41	(Full Load)	Center of Wheelbase		mm	115		115	
	Grade Clearance	Frame/Counterweight		% (tanθ)	46/46		46/46	
42	Brake	Service (Foot)			Hydraulic		Hydraulic	
43		Parking			Hand	Foot	Hand	Foot
45	Battery	Voltage/Capacity (5HR)		V/AH	12/27		12/55	
49	Internal Combustion Engine	Make/Model			TOYOTA/4Y		TOYOTA/1DZ-II [1DZ-III] ** <1DZ-III>***	
50		Rated Power/r.p.m.		kW (JIS ps)	40/2400 (54/2400)		40 (55) /2400 [38 (52) /2400] <36(49)/2400	
51		Rated Torque/r.p.m.		N-m (JIS kg-m)	162/1800 (16.5/1800)		167 (17.0) /1600 [157 (16.0) /2300] <150(15.3)/2000>	
52		Number of Cylinder			4		4	
		Piston Displacement		cc	2237		2486	
		Fuel Tank Capacity		liter	45		45	
55	Transmission	Type			Manual	Powershift	Manual	Powershift
		Stage	FWD/RVS		2/2	1/1	2/2/1/1	1/1

57	Operating Pressure	For Attachments	Mpa (kg/cm^2)	11.8 (120)	11.8 (120)

NOTE: * Computed values.
** 1DZ-II: Non-road Mobile Machinery (97/68/EC; Stage II) EPA Non-road Diesel Emissions (40 CFR Part 89; Interim Tier 2).
1DZ-III: Non-road Mobile Machinery (97/68/EC; Stage IIIA) EPA Non-road Diesel Emissions (40 CFR Part 1039; Interim Tier 4).
*** 1DZ-III:Non-road Mobile Machinery (GB20891-2014; StageIII,IV)

DIMENSIONAL DRAWINGS

(February 2011)

Unit: mm

8FG/8FD15

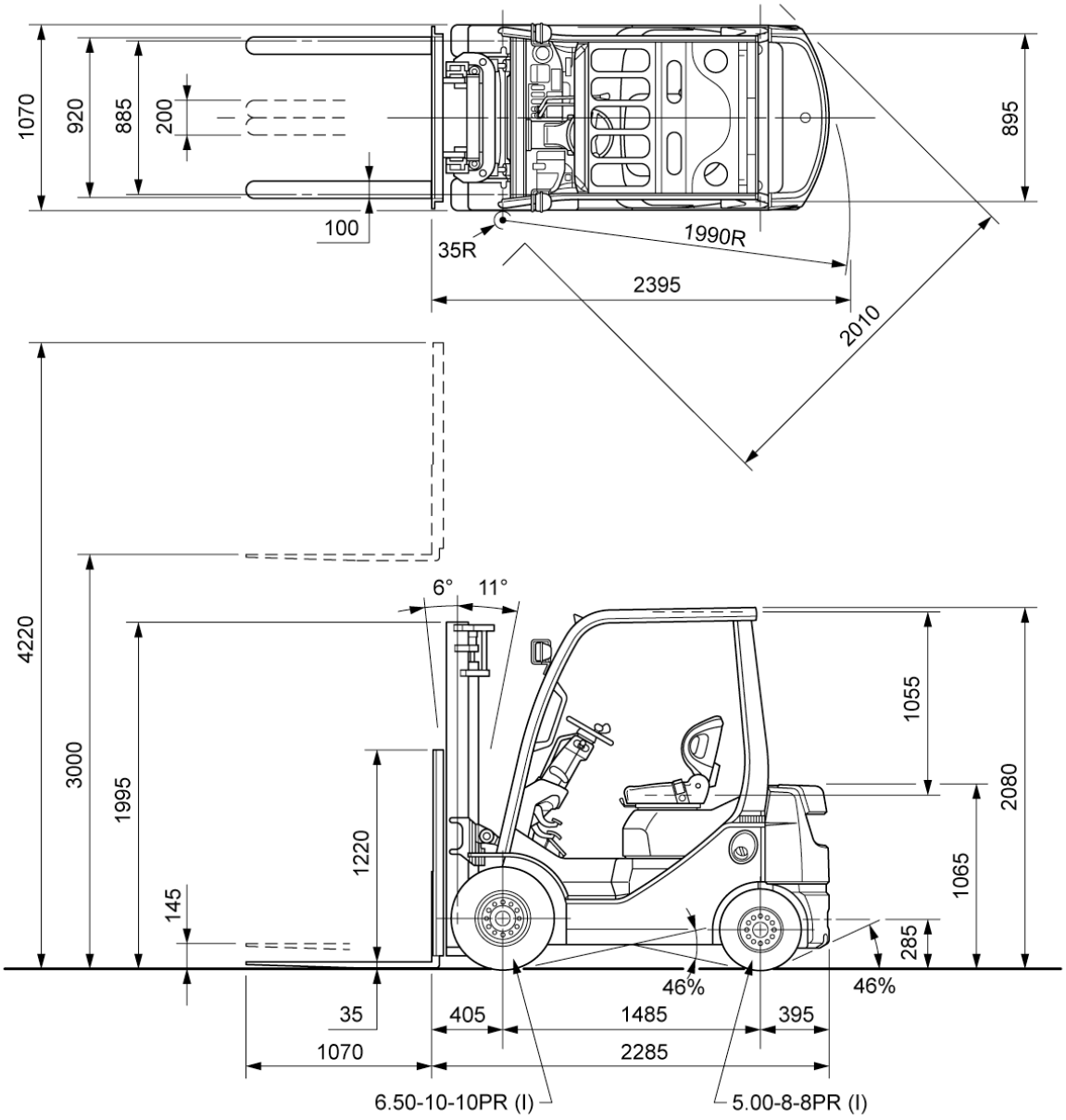

UNDERCLEARANCE

Mast (Full Load)---------- 100
Drive Axle (Full Load)---------- 105
Steer Axle (No Load)---------- 120
Center of Wheelbase (Full Load)--------- 115
Counterweight (No Load)---------- 120

SPECIAL TREAD

(February 2011)

Model		8FG/8FD15		
Front Tire	Single/Dual	Single	Single	Dual
Front Tire Size		6.50-10-10PR (I)	21x8-9-10PR (I)	4.50-12-8PR (I)
Overall Width	mm	1070	1110	1290
Tread, Front	mm	885	920	1010

SPECIAL MASS *(January 2016)*

Wide Visible Full-Free Lift Two-Stage Mast (FV), Wide Visible Full-Free Lift Three-Stage Mast (FSV)

Model				8FG15	8FD15<36kW>	8FG15	8FD15<36kW>
Type of Mast				FV		FSV	
PERFORMANCE							
Speeds	Lifting	Full Load	mm/sec	565	600<580>	570	620<590>
		No Load	mm/sec	610	640<610>	615	650<630>
	Lowering	Full Load	mm/sec	480		480	
		No Load	mm/sec	420		450	
DIMENSIONS							
Load Distance (Centerline of front axle to front face of forks)			mm	405		425	

RATED CAPACITIES *(April 2009)*

8FG/8FD15

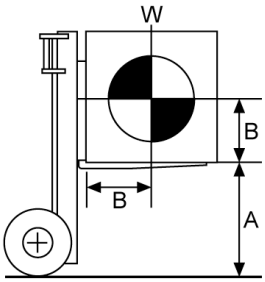

A: Max. Fork Height
B: Load Center
W: Capacity

V, FV Mast (PN or PSC)

Unit: kg (**W**)

A (mm)		4000	4500	5000
B (mm)	500	1500	1450	1300
	600	1350	1300	1170
	700	1220	1180	1060
	800	1120	1090	970
	900	1040	1000	900
	1000	960	930	830
	1100	900	870	780
	1200	840	810	730

FSV Mast (PN)

Unit: kg (**W**)

A (mm)		4300	4500	4700	5000	5500	6000	6500	7000
B (mm)	500	1400	1350	1350	1250 [1300]	950 [1250]	700 [1100]	— [900]	— [650]
	600	1260	1210	1210	1120 [1170]	850 [1120]	630 [990]	— [810]	— [580]
	700	1150	1110	1110	1020 [1060]	780 [1020]	570 [900]	— [740]	— [530]
	800	1050	1020	1020	940 [980]	710 [940]	520 [830]	— [680]	— [490]
	900	970	940	940	870 [900]	660 [870]	480 [760]	— [620]	— [450]
	1000	910	870	870	810 [840]	610 [810]	450 [710]	— [580]	— [420]
	1100	850	820	820	750 [790]	570 [750]	420 [660]	— [540]	— [390]
	1200	790	770	770	710 [740]	540 [710]	390 [620]	— [510]	— [370]

[ ] for dual tire models (PN or PSC).

FSV Mast (PSC)

Unit: kg (**W**)

A (mm)		5000	5500	6000
B (mm)	500	1300	1050	800
	600	1170	940	720
	700	1060	860	650
	800	980	790	600
	900	900	730	550
	1000	840	680	520
	1100	790	630	480
	1200	740	590	450

MAST SPECIFICATIONS & RATED CAPACITIES *(April 2009)*

Wide Visible Mast (V), Wide Visible Full-Free Lift Two-Stage Mast (FV), Wide Visible Full-Free Lift Three-Stage Mast (FSV)

8FG/8FD15

Mast Type	Maximum Fork Height	Overall Height			Free Lift		Single Tire				Dual Tire		
		Lowered	Extended		Without Load Backrest	With Standard Load Backrest	Tilt Range		Load Capacity at 500 mm LC		Tilt Range		Load Capacity at 500 mm LC
			Without Load Backrest	With Standard Load Backrest			FWD	BWD	Pneumatic Tire	Pneumatic-Shaped Cushion Tire	FWD	BWD	PneumaticTire/ Pneumatic-Shaped Cushion Tire
	mm	mm	mm	mm	mm	mm	deg	deg	kg	kg	deg	deg	kg
V	2700	1845	3150*	3920	145	145	6	11	1500	1500	7	10	1500
	3000	1995	3450*	4220	145	145	6	11	1500	1500	7	10	1500
	3300	2145	3750*	4520	145	145	6	11	1500	1500	7	10	1500
	3500	2245	3950*	4720	145	145	6	11	1500	1500	7	10	1500
	3700	2405	4150*	4920	145	145	6	11	1500	1500	7	10	1500
	4000	2595	4450*	5220	145	145	6	11	1500	1500	7	10	1500
	4500	2845	4950*	5720	145	145	6	6	1450	1450	7	10	1450
	5000	3095	5450*	6220	145	145	6	6	1300	1300	7	5	1300
FV	2870***	1930	3440	4090	1365	715	6	11	1500	1500	7	10	1500
	3000	1995	3570	4220	1430	780	6	11	1500	1500	7	10	1500
	3300	2145	3870	4520	1580	930	6	11	1500	1500	7	10	1500
	3500	2245	4070	4720	1680	1030	6	11	1500	1500	7	10	1500
	3700	2405	4270	4920	1840	1190	6	11	1500	1500	7	10	1500
	4000	2595	4570	5220	2030	1380	6	11	1500	1500	7	10	1500
FSV	3700	1795	4240	4920	1260	580	6	6	1400	1400	7	5	1400
	4000	1895	4540	5220	1360	680	6	6	1400	1400	7	5	1400
	4300	1995	4840	5520	1460	780	6	6	1400	1400	7	5	1400
	4500	2065	5040	5720	1530	850	6	6	1350	1350	7	5	1350
	4700	2145	5240	5920	1610	930	6	6	1350	1350	7	5	1350
	5000	2245	5540	6220	1710	1030	6	6	1250	1300	7	5	1300
	5500	2405	6040	6720	1870	1190	6	6	950	1050	7	5	1250
	6000	2595	6540	7220	2060	1380	6	6	700	800	7	5	1100
	6500	2845	7040	7720	2310	1630	—	—	—	—	7	5	900
	7000	3095	7540	8220	2560	1880	—	—	—	—	7	5	650

NOTE: Height of standard load backrest is 1220 mm.
* with A4 piping, plus 155 mm.
** Set only to a Russian specification.

8FG18
8FD18

MAIN VEHICLE SPECIFICATIONS *(January 2016)*

1	Manufacturer				TOYOTA	TOYOTA	
2	Model				**32-8FG18**	**62-8FD18**	
3	Load Capacity			kg	1750	1750	
4	Load Center			mm	500	500	
5	Power Type				Gasoline	Diesel	
6	Operator Position				Rider Seated	Rider Seated	
7	Tire Type		Front/Rear		Pneumatic	Pneumatic	
8	Wheels (x = driven)		Front/Rear		2x/2	2x/2	
9	Maximum Fork Height (MFH)			mm	3000	3000	
10	Free Lift			mm	145	145	
13	Fork Size		T x W x L	mm	35x100x1070	35x100x1070	
	Fork Spread (Outside)		MAX./MIN.	mm	920/200	920/200	
14	Tilt Range		FWD/ BWD	deg	6/11	6/11	
15	Length to Fork Face			mm	2310	2310	
16	Overall Width			mm	1070	1070	
17	Mast Lowered Height			mm	1995	1995	
18	Mast Extended Height			mm	4220	4220	
19	Overhead Guard Height			mm	2080	2080	
21	Turning Radius (Outside)			mm	2010	2010	
22	Load Distance (Centerline of front axle to front face of forks)			mm	405	405	
	Rear Overhang			mm	420	420	
23	Basic Right Angle Stacking Aisle Width (Add load length and clearance)			mm	2415	2415	
24	Speeds	Travel, Max. (FWD/RVS)	Full Load	km/h	18.5/18.5	19.0/19.0	19.0/19.0<18.0/18.0>
			No Load	km/h	19.0/19.0	19.5/19.5	19.5/19.5<18.5/18.5>
25		Lifting	Full Load	mm/sec	610	650	650<650>
			No Load	mm/sec	660	675	675<675>
26		Lowering	Full Load	mm/sec	500	500	500<500>
			No Load	mm/sec	550	550	550<550>
28	Max. Drawbar Pull		Full Load	N (kg)	17500 (1790)	17600 (1790)	17600(1790)<16600 (1690)>
			No Load	N (kg)	6300 (640)	6300 (640)	6300 (640)<6300(640)>
	Max. Drawbar Pull at 1.5km/h *		Full Load	N (kg)	15600 (1590)	16000 (1630)	16000(1630)<14400 (1470)>
29	Gradeability at 1.5 km/h *		Full Load	% (tanθ)	40	40	40<37>
30	Max. Gradeability *		Full Load	% (tanθ)	45	44	44<41>
			No Load	% (tanθ)	20	20	20<20>
32	Total Weight			kg	2610	2710	
33	Weight Distribution	Full Load	Front	kg	3790	3910	
			Rear	kg	570	550	
34		No Load	Front	kg	970	1090	
			Rear	kg	1640	1620	
35	Tires	Number	Front/Rear		2/2	2/2	
36		Size	Front		6.50-10-10PR (I)	6.50-10-10PR (I)	
37			Rear		5.00-8-8PR (I)	5.00-8-8PR (I)	
38	Wheelbase			mm	1485	1485	
39	Tread		Front	mm	885	885	
			Rear	mm	895	895	
	Backrest Height			mm	1220	1220	
	Overhead Guard Clearance			mm	1055	1055	
	Counterweight Height			mm	1060	1060	
	Drawbar Pin Center Height			mm	285	285	
	Step Height/Floor Height			mm	395/635	395/635	
40	Underclearance	Min. <Mast>		mm	100	100	
41	(Full Load)	Center of Wheelbase		mm	115	115	
	Grade Clearance	Frame/Counterweight		% (tanθ)	46/42	46/42	
42	Brake	Service (Foot)			Hydraulic	Hydraulic	
43		Parking			Foot	Foot	
45	Battery	Voltage/Capacity (5HR)		V/AH	12/27	12/55	
49	Internal Combustion Engine	Make/Model			TOYOTA/4Y	TOYOTA/1DZ-II [1DZ-III] ** <1DZ-III>***	
50		Rated Power/r.p.m.		kW (JIS ps)	40/2400 (54/2400)	40 (55) /2400 [38 (52) /2400]<36(49)/2400>	
51		Rated Torque/r.p.m.		N-m (JIS kg-m)	162/1800 (16.5/1800)	167 (17.0) /1600 [157 (16.0) /2300]<150(15.3)/2000>	
52		Number of Cylinder			4	4	
		Piston Displacement		cc	2237	2486	
		Fuel Tank Capacity		liter	45	45	
55	Transmission	Type			Powershift	Powershift	
		Stage	FWD/RVS		1/1	1/1	
57	Operating Pressure	For Attachments		Mpa (kg/cm^2)	11.8 (120)	11.8 (120)	

NOTE: * Computed values.
** 1DZ-II: Non-road Mobile Machinery (97/68/EC; Stage II) EPA Non-road Diesel Emissions (40 CFR Part 89; Interim Tier 2).
1DZ-III: Non-road Mobile Machinery (97/68/EC; Stage IIIA) EPA Non-road Diesel Emissions (40 CFR Part 1039; Interim Tier 4).
*** 1DZ-III:Non-road Mobile Machinery (GB20891-2014; StageIII,IV)

DIMENSIONAL DRAWINGS

(February 2011)

Unit: mm

8FG/8FD18

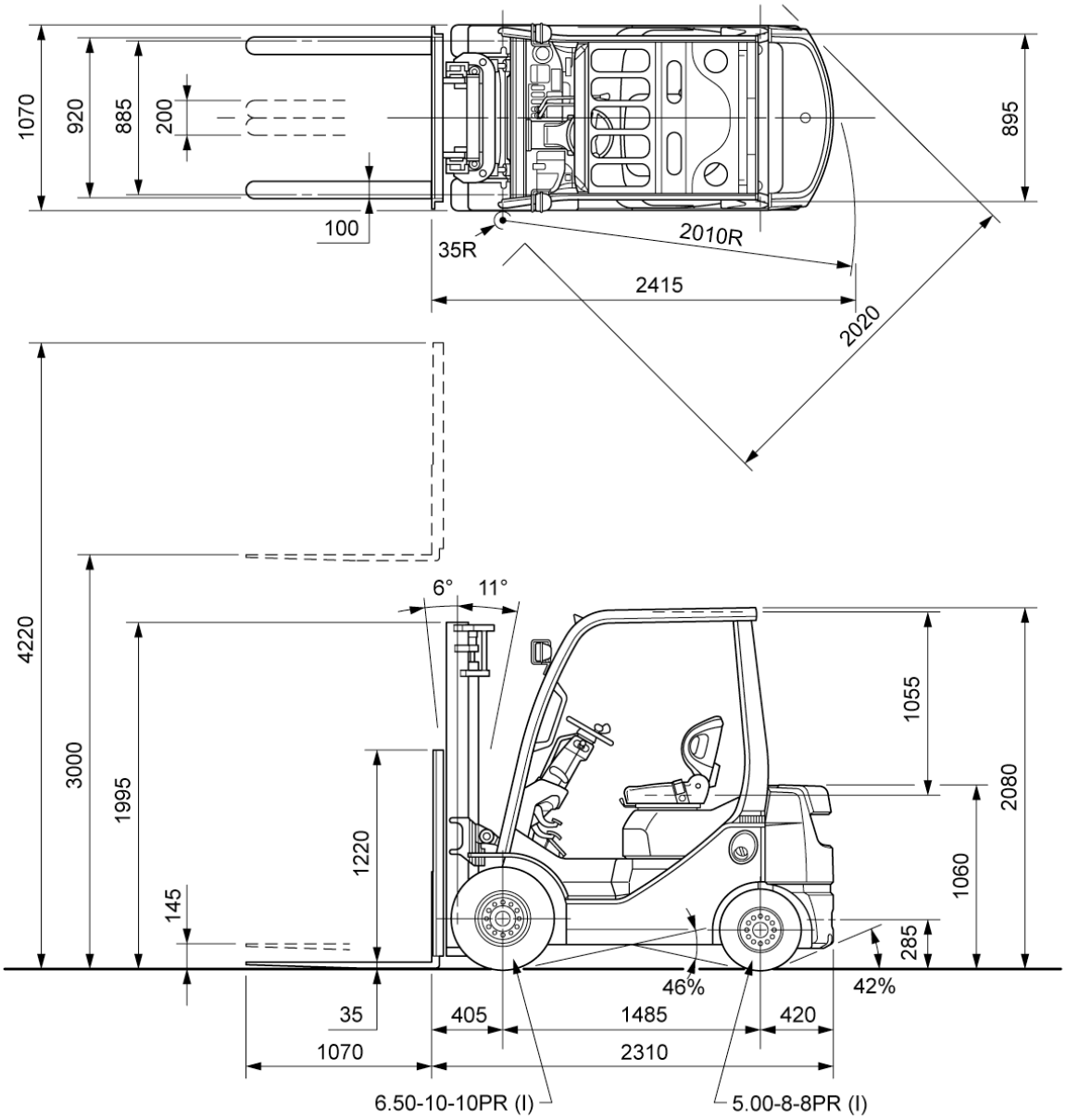

UNDERCLEARANCE

Mast (Full Load)---------- 100
Drive Axle (Full Load)---------- 105
Steer Axle (No Load)---------- 120
Center of Wheelbase (Full Load)--------- 115
Counterweight (No Load)---------- 120

SPECIAL TREAD

(February 2011)

Model		8FG/8FD18		
Front Tire	Single/Dual	Single	Single	Dual
Front Tire Size		6.50-10-10PR (I)	21x8-9-10PR (I)	4.50-12-8PR (I)
Overall Width	mm	1070	1110	1290
Tread, Front	mm	885	920	1010

SPECIAL MAST *(January 2016)*

Wide Visible Full-Free Lift Two-Stage Mast (FV), Wide Visible Full-Free Lift Three-Stage Mast (FSV)

Model				**8FG18**	**8FD18<36kW>**	**8FG18**	**8FD18<36kW>**
Type of Mast				FV		FSV	
PERFORMANCE							
Speeds	Lifting	Full Load	mm/sec	565	600<580>	570	620<590>
		No Load	mm/sec	610	640<610>	615	650<630>
	Lowering	Full Load	mm/sec	480		480	
		No Load	mm/sec	420		450	
DIMENSIONS							
Load Distance (Centerline of front axle to front face of forks)			mm	405		425	

RATED CAPACITIES *(April 2009)*

8FG/8FD18

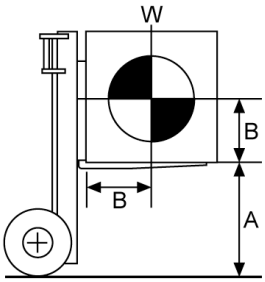

A: Max. Fork Height
B: Load Center
W: Capacity

V, FV Mast (PN or PSC)

Unit: kg (**W**)

A (mm)		3700	4000	4500	5000
B (mm)	500	1750	1700	1600	1550
	600	1570	1530	1440	1390
	700	1430	1390	1310	1270
	800	1310	1270	1200	1160
	900	1210	1180	1110	1070
	1000	1120	1090	1030	1000
	1100	1050	1020	960	930
	1200	980	960	900	870

FSV Mast (PN)

Unit: kg (**W**)

A (mm)		4000	4300	4500	4700	5000	5500	6000	6500	7000
B (mm)	500	1600	1550	1500	1500	1450	1100 [1400]	850 [1200]	— [850]	— [600]
	600	1440	1390	1350	1350	1300	990 [1260]	760 [1080]	— [760]	— [540]
	700	1310	1270	1230	1230	1190	900 [1150]	690 [980]	— [690]	— [490]
	800	1200	1170	1130	1130	1090	830 [1050]	640 [900]	— [640]	— [450]
	900	1110	1080	1040	1040	1010	760 [970]	590 [830]	— [590]	— [410]
	1000	1040	1000	970	970	940	710 [910]	550 [780]	— [550]	— [390]
	1100	970	940	910	910	880	660 [850]	510 [720]	— [510]	— [360]
	1200	910	880	850	850	820	620 [790]	480 [680]	— [480]	— [340]

[ ] for dual tire models (PN or PSC).

FSV Mast (PSC)

Unit: kg (**W**)

A (mm)		5500	6000
B (mm)	500	1200	950
	600	1080	850
	700	980	780
	800	900	710
	900	830	660
	1000	780	610
	1100	720	570
	1200	680	540

MAST SPECIFICATIONS & RATED CAPACITIES *(April 2009)*

Wide Visible Mast (V), Wide Visible Full-Free Lift Two-Stage Mast (FV), Wide Visible Full-Free Lift Three-Stage Mast (FSV)

8FG/8FD18

Mast Type	Maximum Fork Height	Overall Height			Free Lift		Single Tire				Dual Tire		
		Lowered	Extended		Without Load Backrest	With Standard Load Backrest	Tilt Range		Load Capacity at 500 mm LC		Tilt Range		Load Capacity at 500 mm LC
			Without Load Backrest	With Standard Load Backrest			FWD	BWD	Pneumatic Tire	Pneumatic-Shaped Cushion Tire	FWD	BWD	PneumaticTire/ Pneumatic-Shaped Cushion Tire
	mm	mm	mm	mm	mm	mm	deg	deg	kg	kg	deg	deg	kg
V	2700	1845	3330*	3920	145	145	6	11	1750	1750	7	10	1750
	3000	1995	3630*	4220	145	145	6	11	1750	1750	7	10	1750
	3300	2145	3930*	4520	145	145	6	11	1750	1750	7	10	1750
	3500	2245	4130*	4720	145	145	6	11	1750	1750	7	10	1750
	3700	2405	4330*	4920	145	145	6	11	1750	1750	7	10	1750
	4000	2595	4630*	5220	145	145	6	11	1700	1700	7	10	1700
	4500	2845	5130*	5720	145	145	6	6	1600	1600	7	10	1600
	5000	3095	5630*	6220	145	145	6	6	1550	1550	7	5	1550
FV	2870***	1930	3440	4090	1365	715	6	11	1750	1750	7	10	1750
	3000	1995	3570	4220	1430	780	6	11	1750	1750	7	10	1750
	3300	2145	3870	4520	1580	930	6	11	1750	1750	7	10	1750
	3500	2245	4070	4720	1680	1030	6	11	1750	1750	7	10	1750
	3700	2405	4270	4920	1840	1190	6	11	1750	1750	7	10	1750
	4000	2595	4570	5220	2030	1380	6	11	1700	1700	7	10	1700
FSV	3700	1795	4240	4920	1260	580	6	6	1600	1600	7	5	1600
	4000	1895	4540	5220	1360	680	6	6	1600	1600	7	5	1600
	4300	1995	4840	5520	1460	780	6	6	1550	1550	7	5	1550
	4500	2065	5040	5720	1530	850	6	6	1500	1500	7	5	1500
	4700	2145	5240	5920	1610	930	6	6	1500	1500	7	5	1500
	5000	2245	5540	6220	1710	1030	6	6	1450	1450	7	5	1450
	5500	2405	6040	6720	1870	1190	6	6	1100	1200	7	5	1400
	6000	2595	6540	7220	2060	1380	6	6	850	950	7	5	1200
	6500	2845	7040	7720	2310	1630	—	—	—	—	7	5	850
	7000	3095	7540	8220	2560	1880	—	—	—	—	7	5	600

NOTE: Height of standard load backrest is 1220 mm.
* with A4 piping, minus 15 mm.
** Set only to a Russian specification.

8FGK20
8FDK20

MAIN VEHICLE SPECIFICATIONS *(May 2009)*

1	Manufacturer				TOYOTA	TOYOTA
2	Model				**32-8FGK20**	**62-8FDK20**
3	Load Capacity			kg	2000	2000
4	Load Center			mm	500	500
5	Power Type				Gasoline	Diesel
6	Operator Position				Rider Seated	Rider Seated
7	Tire Type		Front/Rear		Pneumatic	Pneumatic
8	Wheels (x = driven)		Front/Rear		2x/2	2x/2
9	Maximum Fork Height (MFH)			mm	3000	3000
10	Free Lift			mm	125	125
13	Fork Size		T x W x L	mm	38x120x1070	38x120x1070
	Fork Spread (Outside)		MAX./MIN.	mm	1020/240	1020/240
14	Tilt Range		FWD/BWD	deg	7/10	7/10
15	Length to Fork Face			mm	2360	2360
16	Overall Width			mm	1155	1155
17	Mast Lowered Height			mm	1975	1975
18	Mast Extended Height			mm	4220	4220
19	Overhead Guard Height			mm	2085	2085
21	Turning Radius (Outside)			mm	2040	2040
22	Load Distance (Centerline of front axle to front face of forks)			mm	420 (430) **	420 (430) **
	Rear Overhang			mm	455	455
23	Basic Right Angle Stacking Aisle Width (Add load length and clearance)			mm	2460	2460
24	Speeds	Travel, Max. (FWD/RVS)	Full Load	km/h	17.0/17.0	17.0/17.0
			No Load	km/h	17.5/17.5	17.5/17.5
25		Lifting	Full Load	mm/sec	600	580
			No Load	mm/sec	640	600
26		Lowering	Full Load	mm/sec	500	500
			No Load	mm/sec	550	550
28	Max. Drawbar Pull		Full Load	N (kg)	19000 (1940)	19500 (1990)
			No Load	N (kg)	7800 (800)	7800 (800)
	Max. Drawbar Pull at 1.5km/h *		Full Load	N (kg)	17400 (1770)	17500 (1780)
29	Gradeability at 1.5 km/h *		Full Load	% (tanθ)	35	34
30	Max. Gradeability *		Full Load	% (tanθ)	39	38
			No Load	% (tanθ)	20	20
32	Total Weight			kg	3110	3180
33	Weight Distribution	Full Load	Front	kg	4440	4480
			Rear	kg	670	700
34		No Load	Front	kg	1140	1180
			Rear	kg	1970	2000
35	Tires	Number	Front/Rear		2/2	2/2
36		Size	Front		21x8-9-14PR (I)	21x8-9-14PR (I)
37			Rear		18x7-8-10PR (I)	18x7-8-10PR (I)
38	Wheelbase			mm	1485	1485
39	Tread		Front	mm	960	960
			Rear	mm	940	940
	Backrest Height			mm	1220	1220
	Overhead Guard Clearance			mm	1055	1055
	Counterweight Height			mm	1215	1215
	Drawbar Pin Center Height			mm	285	285
	Step Height/Floor Height			mm	380/615	380/615
40	Underclearance	Min. <Mast>		mm	80	80
41	(Full Load)	Center of Wheelbase		mm	105	105
	Grade Clearance	Frame/Counterweight		% (tanθ)	40/38	40/38
42	Brake	Service (Foot)			Hydraulic	Hydraulic
43		Parking			Foot	Foot
45	Battery	Voltage/Capacity (5HR)		V/AH	12/27	12/55
49	Internal Combustion Engine	Make/Model			TOYOTA/4Y	TOYOTA/1DZ-II ***
50		Rated Power/r.p.m.		kW (JIS ps)	40/2400 (54/2400)	40/2400 (55/2400)
51		Rated Torque/r.p.m.		N-m (JIS kg-m)	162/1800 (16.5/1800)	167/1600 (17.0/1600)
52		Number of Cylinder			4	4
		Piston Displacement		cc	2237	2486
		Fuel Tank Capacity		liter	55	55
55	Transmission	Type			Powershift	Powershift
		Stage	FWD/RVS		1/1	1/1
57	Operating Pressure	For Attachments		Mpa (kg/cm^2)	15.7 (160)	15.7 (160)

NOTE: * Computed values.
** Number shown in ( ) is when the forkbar width is other than 1020 mm.
*** 1DZ-II: Non-road Mobile Machinery (97/68/EC; Stage II) EPA Non-road Diesel Emissions (40 CFR Part 89; Interim Tier 2).

DIMENSIONAL DRAWINGS

(February 2011)

Unit: mm

8FGK/8FDK20

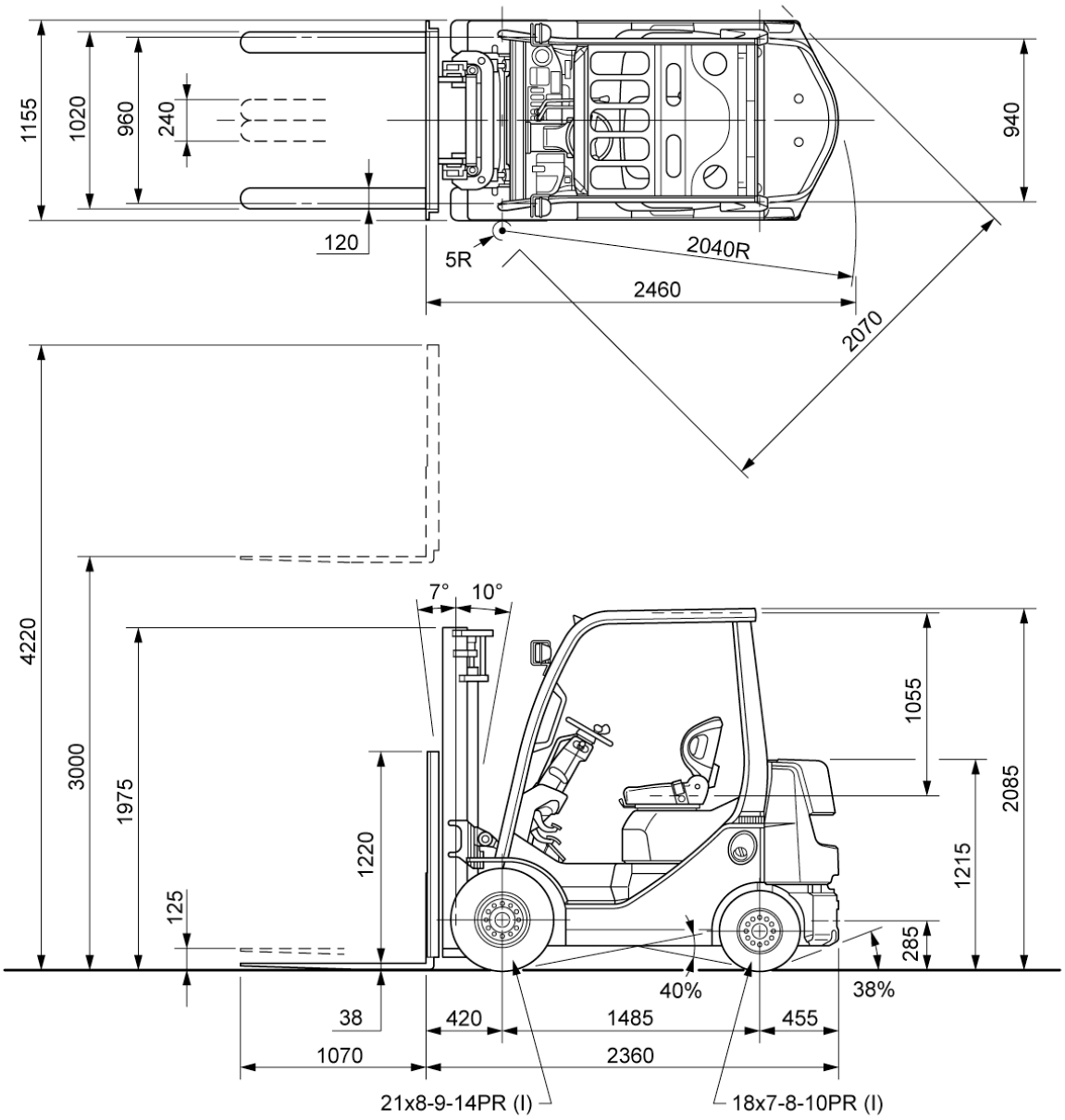

UNDERCLEARANCE

Mast (Full Load)	80
Drive Axle (Full Load)	85
Steer Axle (No Load)	130
Center of Wheelbase (Full Load)	105
Counterweight (No Load)	125

SPECIAL MAST *(February 2011)*

Wide Visible Full-Free Lift Two-Stage Mast (FV), Wide Visible Full-Free Lift Three-Stage Mast (FSV)

Model				8FGK20	8FDK20	8FGK20	8FDK20
Type of Mast				FV		FSV	
PERFORMANCE							
Speeds	Lifting	Full Load	mm/sec	560	550	560	550
		No Load	mm/sec	600	585	600	575
	Lowering	Full Load	mm/sec	480		480	
		No Load	mm/sec	420		450	
DIMENSIONS							
Load Distance (Centerline of front axle to front face of forks)			mm	430		450 (455) *	

NOTE: * Number shown in ( ) is when the forkbar width is other than 1020 mm.

RATED CAPACITIES *(April 2009)*

8FGK/8FDK20

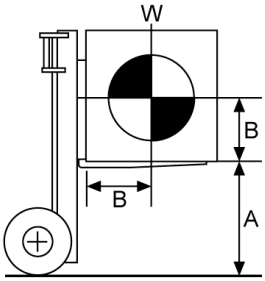

A: Max. Fork Height
B: Load Center
W: Capacity

V, FV Mast (PN)

Unit: kg (**W**)

A (mm)		4000	4500	5000
B (mm)	500	2000	1950	1850
	600	1800	1760	1670
	700	1640	1600	1520
	800	1510	1470	1400
	900	1400	1360	1290
	1000	1300	1270	1200
	1100	1220	1190	1120
	1200	1140	1110	1060

V, FV Mast (PSC)

Unit: kg (**W**)

A (mm)		4000	4500	5000
B (mm)	500	2000	2000	2000
	600	1800	1800	1800
	700	1640	1640	1640
	800	1510	1510	1510
	900	1400	1400	1400
	1000	1300	1300	1300
	1100	1220	1220	1220
	1200	1140	1140	1140

FSV Mast (PN)

Unit: kg (**W**)

A (mm)		3700	4000	4300	4500	4700	5000	5500	6000
B (mm)	500	2000	1950	1900	1850	1850	1450	1200	850
	600	1810	1760	1720	1670	1670	1310	1080	760
	700	1650	1610	1570	1530	1530	1200	990	700
	800	1520	1480	1440	1400	1400	1100	910	640
	900	1410	1370	1340	1300	1300	1020	840	600
	1000	1310	1280	1240	1210	1210	950	780	550
	1100	1230	1200	1160	1130	1130	890	730	520
	1200	1150	1120	1090	1060	1060	830	690	490

FSV Mast (PSC)

Unit: kg (**W**)

A (mm)		4700	5000	5500	6000
B (mm)	500	2000	1600	1350	1000
	600	1810	1440	1220	900
	700	1650	1320	1110	820
	800	1520	1210	1020	760
	900	1410	1120	950	700
	1000	1310	1050	880	650
	1100	1230	980	830	610
	1200	1150	920	780	570

MAST SPECIFICATIONS & RATED CAPACITIES *(April 2009)*

Wide Visible Mast (V), Wide Visible Full-Free Lift Two-Stage Mast (FV), Wide Visible Full-Free Lift Three-Stage Mast (FSV)

8FGK/8FDK20

Mast Type	Maximum Fork Height	Overall Height			Free Lift		Single Tire			
		Lowered	Extended		Without Load Backrest	With Standard Load Backrest	Tilt Range		Load Capacity at 500 mm LC	
			Without Load Backrest	With Standard Load Backrest			FWD	BWD	Pneumatic Tire	Pneumatic-Shaped Cushion Tire
	mm	mm	mm	mm	mm	mm	deg	deg	kg	kg
V	2700	1825	3375	3920	120	120	7	10	2000	2000
	3000	1975	3675	4220	120	120	7	10	2000	2000
	3300	2125	3975	4520	120	120	7	10	2000	2000
	3500	2225	4175	4720	120	120	7	10	2000	2000
	3700	2385	4375	4920	120	120	7	10	2000	2000
	4000	2575	4675	5220	120	120	7	10	2000	2000
	4500	2825	5175	5720	120	120	7	5	1950	2000
	5000	3075	5675	6220	120	120	7	5	1850	2000
FV	3000	1975	3610	4220	1365	760	7	10	2000	2000
	3300	2125	3910	4520	1515	910	7	10	2000	2000
	3500	2225	4110	4720	1615	1010	7	10	2000	2000
	3700	2385	4310	4920	1775	1170	7	10	2000	2000
	4000	2575	4610	5220	1965	1360	7	10	2000	2000
FSV	3700	1775	4350	4920	1125	560	7	5	2000	2000
	4000	1875	4650	5220	1225	660	7	5	1950	2000
	4300	1975	4950	5520	1325	760	7	5	1900	2000
	4500	2045	5150	5720	1395	830	7	5	1850	2000
	4700	2125	5350	5920	1475	910	7	5	1850	2000
	5000	2225	5650	6220	1575	1010	7	5	1450	1600
	5500	2385	6150	6720	1735	1170	7	5	1200	1350
	6000	2575	6650	7220	1925	1360	7	5	850	1000

NOTE: Height of standard load backrest is 1220 mm.

8FG20
8FD20

MAIN VEHICLE SPECIFICATIONS *(January 2016)*

1	Manufacturer				TOYOTA		TOYOTA	
2	Model				**30-8FG20**	**32-8FG20**	**60-8FD20**	**62-8FD20**
3	Load Capacity			kg	2000		2000	
4	Load Center			mm	500		500	
5	Power Type				Gasoline		Diesel	
6	Operator Position				Rider Seated		Rider Seated	
7	Tire Type		Front/Rear		Pneumatic		Pneumatic	
8	Wheels (x = driven)		Front/Rear		2x/2		2x/2	
9	Maximum Fork Height (MFH)			mm	3000		3000	
10	Free Lift			mm	150		150	
13	Fork Size		T x W x L	mm	38x120x1070		38x120x1070	
	Fork Spread (Outside)		MAX./MIN.	mm	1020/240		1020/240	
14	Tilt Range		FWD/BWD	deg	6/11		6/11	
15	Length to Fork Face			mm	2550		2550	
16	Overall Width			mm	1150		1150	
17	Mast Lowered Height			mm	1995		1995	
18	Mast Extended Height			mm	4220		4220	
19	Overhead Guard Height			mm	2110		2110	
21	Turning Radius (Outside)			mm	2200		2200	
22	Load Distance (Centerline of front axle to front face of forks)			mm	445 (455) **		445 (455) **	
	Rear Overhang			mm	455		455	
23	Basic Right Angle Stacking Aisle Width (Add load length and clearance)			mm	2645		2645	
24	Speeds	Travel, Max. (FWD/RVS)	Full Load	km/h	18.0/18.0	17.5/17.5	19.5/19.5	19.0/19.0 <17.0/17.0>
			No Load	km/h	18.5/18.5	18.0/18.0	20.0/20.0	19.5/19.5 <17.5/17.5>
25		Lifting	Full Load	mm/sec	600	600	615	615<560>
			No Load	mm/sec	640	640	655	655<600>
26		Lowering	Full Load	mm/sec	500	500	500	500<500>
			No Load	mm/sec	500	550	500	500<500>
28	Max. Drawbar Pull		Full Load	N (kg)	16500 (1680)	18700 (1910)	17500 (1780)	18600 (1900) <17400(1770)>
			No Load	N (kg)	9000 (920)	9000 (920)	9100 (930)	9100 (930) <9100 (930)>
	Max. Drawbar Pull at 1.5km/h *		Full Load	N (kg)	—	17200 (1750)	—	16900 (1720) <15000(1530)>
29	Gradeability at 1.5 km/h *		Full Load	% (tanθ)	—	37	—	32<32>
30	Max. Gradeability *		Full Load	% (tanθ)	33	41	33	36<36>
			No Load	% (tanθ)	22	22	22	22<22>
32	Total Weight			kg	3250		3250	
33	Weight Distribution	Full Load	Front	kg	4580		4600	
			Rear	kg	670		690	
34		No Load	Front	kg	1410		1430	
			Rear	kg	1840		1860	
35	Tires	Number	Front/Rear		2/2		2/2	
36		Size	Front		7.00-12-12PR (I)		7.00-12-12PR (I)	
37			Rear		6.00-9-10PR (I)		6.00-9-10PR (I)	
38	Wheelbase			mm	1650		1650	
39	Tread		Front	mm	960		960	
			Rear	mm	965		965	
	Backrest Height			mm	1220		1220	
	Overhead Guard Clearance			mm	1055		1055	
	Counterweight Height			mm	1095		1095	
	Drawbar Pin Center Height			mm	310		310	
	Step Height/Floor Height			mm	435/675		435/675	
40	Underclearance	Min. <Mast>		mm	95		95	
41	(Full Load)	Center of Wheelbase		mm	140		140	
	Grade Clearance	Frame/Counterweight		% (tanθ)	51/49		51/49	
42	Brake	Service (Foot)			Hydraulic		Hydraulic	
43		Parking			Hand	Foot	Hand	Foot
45	Battery	Voltage/Capacity (5HR)		V/AH	12/27		12/55	
49	Internal Combustion Engine	Make/Model			TOYOTA/4Y		TOYOTA/1DZ-II [1DZ-III] *** <1DZ-III>****	
50		Rated Power/r.p.m.		kW (JIS ps)	40/2400 (54/2400)		44 (60) /2600 [41 (55) /2500] <36(49)/2400>	
51		Rated Torque/r.p.m.		N-m (JIS kg-m)	162/1800 (16.5/1800)		167 (17.0) /1600 [157 (16.0) /2500] <150(15.3)/2000>	
52		Number of Cylinder			4		4	
		Piston Displacement		cc	2237		2486	
		Fuel Tank Capacity		liter	60		60	
55	Transmission	Type			Manual	Powershift	Manual	Powershift
		Stage	FWD/RVS		2/2	1/1	2/2	1/1
57	Operating Pressure	For Attachments		Mpa (kg/cm^2)	15.7 (160)		15.7 (160)	

NOTE: * Computed values.
** Number shown in ( ) is when the forkbar width is other than 1020 mm.
*** 1DZ-II: Non-road Mobile Machinery (97/68/EC; Stage II) EPA Non-road Diesel Emissions (40 CFR Part 89; Interim Tier 2).
1DZ-III: Non-road Mobile Machinery (97/68/EC; Stage IIIA) EPA Non-road Diesel Emissions (40 CFR Part 1039; Interim Tier 4).
**** 1DZ-III:Non-road Mobile Machinery (GB20891-2014; StageIII,IV)

MAIN VEHICLE SPECIFICATIONS *(March 2016)*

1	Manufacturer				TOYOTA		TOYOTA
2	Model				**70-8FD20**	**72-8FD20**	**82-8FD20**
3	Load Capacity			kg	2000		2000
4	Load Center			mm	500		500
5	Power Type				Diesel		Diesel
6	Operator Position				Rider Seated		Rider Seated
7	Tire Type		Front/Rear		Pneumatic		Pneumatic
8	Wheels (x = driven)		Front/Rear		2x/2		2x/2
9	Maximum Fork Height (MFH)			mm	3000		3000
10	Free Lift			mm	150		150
13	Fork Size		T x W x L	mm	38x120x1070		38x120x1070
	Fork Spread (Outside)		MAX./MIN.	mm	1020/240		1020/240
14	Tilt Range		FWD/BWD	deg	6/11		6/11
15	Length to Fork Face			mm	2550		2550
16	Overall Width			mm	1150		1150
17	Mast Lowered Height			mm	1995		1995
18	Mast Extended Height			mm	4220		4220
19	Overhead Guard Height			mm	2110		2110
21	Turning Radius (Outside)			mm	2200		2200
22	Load Distance (Centerline of front axle to front face of forks)			mm	445 (455) **		445 (455) **
	Rear Overhang			mm	455		455
23	Basic Right Angle Stacking Aisle Width (Add load length and clearance)			mm	2645		2645
24	Speeds	Travel, Max. (FWD/RVS)	Full Load	km/h	19.0/19.0	19.0/19.0	19.0/19.0
			No Load	km/h	19.5/19.5	19.5/19.5	19.5/19.5
25		Lifting	Full Load	mm/sec	650	650	650
			No Load	mm/sec	675	675	675
26		Lowering	Full Load	mm/sec	500	500	500
			No Load	mm/sec	500	500	500
28	Max. Drawbar Pull		Full Load	N (kg)	19500 (1990)	20000 (2040)	20000 (2040)
			No Load	N (kg)	9200 (940)	9200 (940)	9200 (940)
	Max. Drawbar Pull at 1.5km/h *		Full Load	N (kg)	—	17500 (1780)	17500 (1780)
29	Gradeability at 1.5 km/h *		Full Load	% (tanθ)	—	34	34
30	Max. Gradeability *		Full Load	% (tanθ)	38	38	38
			No Load	% (tanθ)	22	22	22
32	Total Weight			kg	3340		3340
33	Weight Distribution	Full Load	Front	kg	4620		4620
			Rear	kg	720		720
34		No Load	Front	kg	1450		1450
			Rear	kg	1890		1890
35	Tires	Number	Front/Rear		2/2		2/2
36		Size	Front		7.00-12-12PR (I)		7.00-12-12PR (I)
37			Rear		6.00-9-10PR (I)		6.00-9-10PR (I)
38	Wheelbase			mm	1650		1650
39	Tread		Front	mm	960		960
			Rear	mm	965		965
	Backrest Height			mm	1220		1220
	Overhead Guard Clearance			mm	1055		1055
	Counterweight Height			mm	1095		1095
	Drawbar Pin Center Height			mm	310		310
	Step Height/Floor Height			mm	435/675		435/675
40	Underclearance	Min. <Mast>		mm	95		95
41	(Full Load)	Center of Wheelbase		mm	140		140
	Grade Clearance	Frame/Counterweight		% (tanθ)	51/49		51/49
42	Brake	Service (Foot)			Hydraulic		Hydraulic
43		Parking			Hand	Foot	Foot
45	Battery	Voltage/Capacity (5HR)		V/AH	12/64		12/70
49	Internal Combustion Engine	Make/Model			TOYOTA/2Z ***		TOYOTA/3Z
50		Rated Power/r.p.m.		kW (JIS ps)	49/2200 (66/2200)		42/2200 (57/2200)
51		Rated Torque/r.p.m.		N-m (JIS kg-m)	216/1600 (22.0/1600)		200/1600 (20.4/1600)
52		Number of Cylinder			4		4
		Piston Displacement		cc	3469		3469
		Fuel Tank Capacity		liter	60		60
55	Transmission	Type			Manual	Powershift	Powershift
		Stage	FWD/RVS		2/2	1/1	1/1
57	Operating Pressure	For Attachments		Mpa (kg/cm^2)	15.7 (160)		15.7 (160)

NOTE: * Computed values.
** Number shown in ( ) is when the forkbar width is other than 1020 mm.
*** *** 2Z: Non-road Mobile Machinery (97/68/EC; Stage II).

DIMENSIONAL DRAWINGS *(February 2011)*

Unit: mm

8FG/8FD20

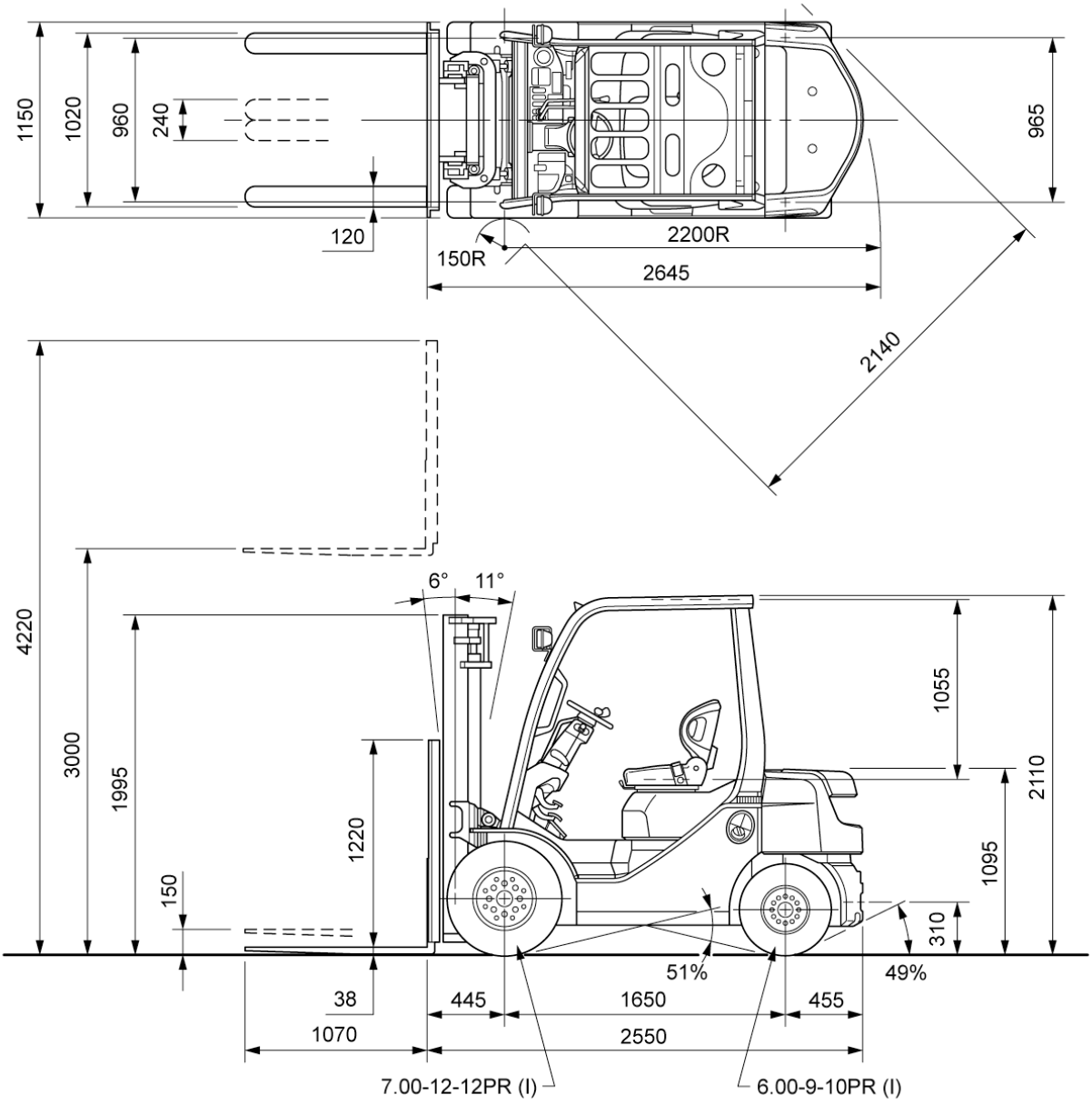

UNDERCLEARANCE

Mast (Full Load)---------- 95
Drive Axle (Full Load)---------- 130
Steer Axle (No Load)---------- 160
Center of Wheelbase (Full Load)--------- 140
Counterweight (No Load)---------- 150

SPECIAL TREAD *(February 2011)*

Model		8FG/8FD20		
Front Tire	Single/Dual	Single	Dual	Dual
Front Tire Size		7.00-12-12PR (I)	5.50-15-8PR (I)	7.00-12-12PR (I)
Overall Width	mm	1150	1450	1610
Tread, Front	mm	960	1105	1190

SPECIAL MAST *(January 2016)*

Wide Visible Full-Free Lift Two-Stage Mast (FV), Wide Visible Full-Free Lift Three-Stage Mast (FSV)

Model				8FG20	60-8FD20 62-8FD20 <36kW>	70-8FD20 72-8FD20 82-8FD20	8FG20	60-8FD20 62-8FD20 <36kW>	70-8FD20 72-8FD20 82-8FD20
Type of Mast				FV			FSV		
PERFORMANCE									
Speeds	Lifting	Full Load	mm/sec	560	600<525>	625	560	590<530>	620
		No Load	mm/sec	600	640<565>	655	600	630<570>	645
	Lowering	Full Load	mm/sec	480			480		
		No Load	mm/sec	420			450		
DIMENSIONS									
Load Distance (Centerline of front axle to front face of forks)			mm	470			480 (485) **		

NOTE: * Number shown in ( ) is when the forkbar width is other than 1020 mm.

RATED CAPACITIES *(April 2009)*

8FG/8FD20

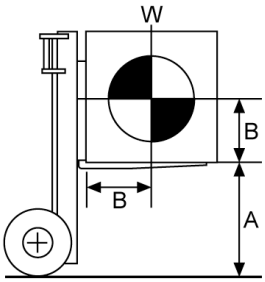

A: Max. Fork Height
B: Load Center
W: Capacity

V, FV Mast (PN)

Unit: kg (**W**)

A (mm)		4000	4500	5000
B (mm)	500	2000	1950	1850 [1900]
	600	1810	1760	1670 [1710]
	700	1650	1610	1520 [1570]
	800	1520	1480	1400 [1440]
	900	1400	1370	1300 [1330]
	1000	1310	1270	1210 [1240]
	1100	1220	1190	1130 [1160]
	1200	1150	1120	1060 [1090]
	1300	1080	1060	1000 [1030]

[ ] for dual tire models.

V, FV Mast (PSC)

Unit: kg (**W**)

A (mm)		4500	5000
B (mm)	500	1950	1900
	600	1760	1710
	700	1610	1570
	800	1480	1440
	900	1370	1330
	1000	1270	1240
	1100	1190	1160
	1200	1120	1090
	1300	1060	1030

FSV Mast (PN)

Unit: kg (**W**)

A (mm)		3700	4000	4300	4500	4700	5000	5500	6000	6500	7000
B (mm)	500	2000	1950	1900 [1950]	1850 [1900]	1850 [1900]	1450 [1850]	1200 [1800]	850 [1600]	— [1550]	— [1200]
	600	1810	1760	1720 [1760]	1670 [1720]	1670 [1720]	1310 [1670]	1080 [1630]	770 [1450]	— [1400]	— [1080]
	700	1650	1610	1570 [1610]	1530 [1570]	1530 [1570]	1200 [1530]	990 [1490]	700 [1320]	— [1280]	— [990]
	800	1520	1490	1450 [1490]	1410 [1450]	1410 [1450]	1100 [1410]	910 [1370]	650 [1220]	— [1180]	— [910]
	900	1410	1380	1340 [1380]	1310 [1340]	1310 [1340]	1020 [1310]	850 [1270]	600 [1130]	— [1090]	— [850]
	1000	1320	1280	1250 [1280]	1220 [1250]	1220 [1250]	950 [1220]	790 [1180]	560 [1050]	— [1020]	— [790]
	1100	1230	1200	1170 [1200]	1140 [1170]	1140 [1170]	890 [1140]	740 [1110]	520 [990]	— [950]	— [740]
	1200	1160	1130	1100 [1130]	1070 [1100]	1070 [1100]	840 [1070]	690 [1040]	490 [930]	— [900]	— [690]
	1300	1090	1070	1040 [1070]	1010 [1040]	1010 [1040]	790 [1010]	650 [980]	460 [870]	— [850]	— [650]

[ ] for dual tire models (PN or PSC).

FSV Mast (PSC)

Unit: kg (**W**)

A (mm)		5000	5500	6000
B (mm)	500	1600	1350	1000
	600	1450	1220	900
	700	1320	1120	820
	800	1220	1030	760
	900	1130	950	700
	1000	1050	890	660
	1100	990	830	610
	1200	930	780	580
	1300	870	740	540

MAST SPECIFICATIONS & RATED CAPACITIES

(April 2009)

Wide Visible Mast (V), Wide Visible Full-Free Lift Two-Stage Mast (FV), Wide Visible Full-Free Lift Three-Stage Mast (FSV)

8FG/8FD20

Mast Type	Maximum Fork Height	Overall Height			Free Lift		Single Tire				Dual Tire			
		Lowered	Extended		Without Load Backrest	With Standard Load Backrest	Tilt Range		Load Capacity at 500 mm LC		Tilt Range		Load Capacity at 500 mm LC	
			Without Load Backrest	With Standard Load Backrest			FWD	BWD	Pneumatic Tire	Pneumatic-Shaped Cushion Tire	FWD	BWD	PneumaticTire/ Pneumatic-Shaped Cushion Tire	
	mm	mm	mm	mm	mm	mm	deg	deg	kg	kg	deg	deg	kg	
V	2700	1845	3370*	3920	145	145	6	11	2000	2000	6	11	2000	
	3000	1995	3670*	4220	145	145	6	11	2000	2000	6	11	2000	
	3300	2145	3970*	4520	145	145	6	11	2000	2000	6	11	2000	
	3500	2245	4170*	4720	145	145	6	11	2000	2000	6	11	2000	
	3700	2405	4370*	4920	145	145	6	11	2000	2000	6	11	2000	
	4000	2595	4670*	5220	145	145	6	11	2000	2000	6	11	2000	
	4500	2845	5170*	5720	145	145	6	6	1950	1950	6	11	1950	
	5000	3095	5670*	6220	145	145	6	6	1850	1900	6	6	1900	
FV	3000	1995	3605	4220	1390	775	6	11	2000	2000	6	11	2000	
	3300	2145	3905	4520	1540	925	6	11	2000	2000	6	11	2000	
	3500	2245	4105	4720	1640	1025	6	11	2000	2000	6	11	2000	
	3700	2405	4305	4920	1800	1185	6	11	2000	2000	6	11	2000	
	4000	2595	4605	5220	1990	1375	6	11	2000	2000	6	11	2000	
FSV	3700	1795	4265	4920	1230	575	6	6	2000	2000	6	6	2000	
	4000	1895	4565	5220	1330	675	6	6	1950	1950	6	6	1950	
	4300	1995	4865	5520	1430	775	6	6	1900	1900	6	6	1950	
	4500	2065	5065	5720	1500	845	6	6	1850	1850	6	6	1900	
	4700	2145	5265	5920	1580	925	6	6	1850	1850	6	6	1900	
	5000	2245	5565	6220	1680	1025	6	6	1450	1600	6	6	1850	
	5500	2405	6065	6720	1840	1185	6	6	1200	1350	6	6	1800	
	6000	2595	6565	7220	2030	1375	6	6	850	1000	6	6	1600	
	6500	2845	7065	7720	2280	1625	—	—	—	—	6	6	1550	
	7000	3095	7565	8220	2530	1875	—	—	—	—	6	6	1200	

NOTE: Height of standard load backrest is 1220 mm.
* with A4 piping, minus 15 mm.

8FGK25
8FDK25

MAIN VEHICLE SPECIFICATIONS *(May 2009)*

1	Manufacturer				TOYOTA	TOYOTA
2	Model				**32-8FGK25**	**62-8FDK25**
3	Load Capacity			kg	2500	2500
4	Load Center			mm	500	500
5	Power Type				Gasoline	Diesel
6	Operator Position				Rider Seated	Rider Seated
7	Tire Type		Front/Rear		Pneumatic	Pneumatic
8	Wheels (x = driven)		Front/Rear		2x/2	2x/2
9	Maximum Fork Height (MFH)			mm	3000	3000
10	Free Lift			mm	130	130
13	Fork Size		T x W x L	mm	42x120x1070	42x120x1070
	Fork Spread (Outside)		MAX./MIN.	mm	1020/240	1020/240
14	Tilt Range		FWD/BWD	deg	7/10	7/10
15	Length to Fork Face			mm	2420	2420
16	Overall Width			mm	1155	1155
17	Mast Lowered Height			mm	1975	1975
18	Mast Extended Height			mm	4220	4220
19	Overhead Guard Height			mm	2085	2085
21	Turning Radius (Outside)			mm	2090	2090
22	Load Distance (Centerline of front axle to front face of forks)			mm	425 (430) **	425 (430) **
	Rear Overhang			mm	510	510
23	Basic Right Angle Stacking Aisle Width (Add load length and clearance)			mm	2515	2515
24	Speeds	Travel, Max. (FWD/RVS)	Full Load	km/h	17.0/17.0	17.0/17.0
			No Load	km/h	17.5/17.5	17.5/17.5
25		Lifting	Full Load	mm/sec	600	580
			No Load	mm/sec	640	600
26		Lowering	Full Load	mm/sec	500	500
			No Load	mm/sec	500	500
28	Max. Drawbar Pull		Full Load	N (kg)	18800 (1920)	19500 (1990)
			No Load	N (kg)	6800 (690)	7300 (740)
	Max. Drawbar Pull at 1.5km/h *		Full Load	N (kg)	17200 (1750)	17500 (1780)
29	Gradeability at 1.5 km/h *		Full Load	% (tanθ)	29	28
30	Max. Gradeability *		Full Load	% (tanθ)	32	32
			No Load	% (tanθ)	16	16
32	Total Weight			kg	3550	3610
33	Weight Distribution	Full Load	Front	kg	5240	5230
			Rear	kg	810	880
34		No Load	Front	kg	1100	1090
			Rear	kg	2450	2520
35	Tires	Number	Front/Rear		2/2	2/2
36		Size	Front		21x8-9-14PR (I)	21x8-9-14PR (I)
37			Rear		18x7-8-10PR (I)	18x7-8-10PR (I)
38	Wheelbase			mm	1485	1485
39	Tread		Front	mm	960	960
			Rear	mm	940	940
	Backrest Height			mm	1220	1220
	Overhead Guard Clearance			mm	1055	1055
	Counterweight Height			mm	1215	1215
	Drawbar Pin Center Height			mm	285	285
	Step Height/Floor Height			mm	380/615	380/615
40	Underclearance	Min. <Mast>		mm	80	80
41	(Full Load)	Center of Wheelbase		mm	105	105
	Grade Clearance	Frame/Counterweight		% (tanθ)	40/35	40/35
42	Brake	Service (Foot)			Hydraulic	Hydraulic
43		Parking			Foot	Foot
45	Battery	Voltage/Capacity (5HR)		V/AH	12/27	12/55
49	Internal Combustion Engine	Make/Model			TOYOTA/4Y	TOYOTA/1DZ-II ***
50		Rated Power/r.p.m.		kW (JIS ps)	40/2400 (54/2400)	40/2400 (55/2400)
51		Rated Torque/r.p.m.		N-m (JIS kg-m)	162/1800 (16.5/1800)	167/1600 (17.0/1600)
52		Number of Cylinder			4	4
		Piston Displacement		cc	2237	2486
		Fuel Tank Capacity		liter	55	55
55	Transmission	Type			Powershift	Powershift
		Stage	FWD/RVS		1/1	1/1
57	Operating Pressure	For Attachments		Mpa (kg/cm^2)	15.7 (160)	15.7 (160)

NOTE: * Computed values.
** Number shown in ( ) is when the forkbar width is other than 1020 mm.
*** 1DZ-II: Non-road Mobile Machinery (97/68/EC; Stage II) EPA Non-road Diesel Emissions (40 CFR Part 89; Interim Tier 2).

DIMENSIONAL DRAWINGS

(February 2011)

Unit: mm

8FGK/8FDK25

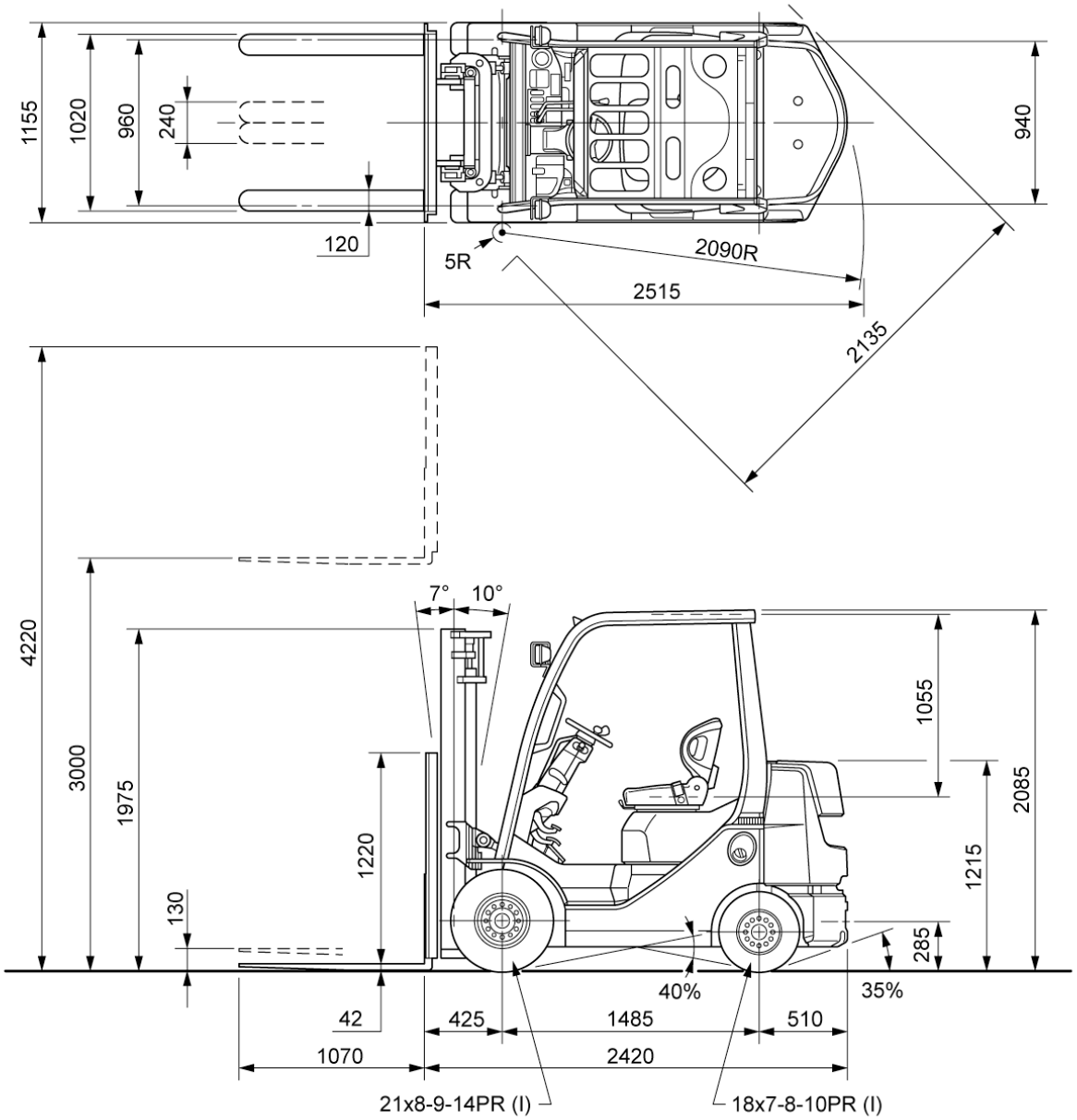

UNDERCLEARANCE

Mast (Full Load)	80
Drive Axle (Full Load)	85
Steer Axle (No Load)	130
Center of Wheelbase (Full Load)	105
Counterweight (No Load)	125

SPECIAL MAST *(February 2011)*

Wide Visible Full-Free Lift Two-Stage Mast (FV), Wide Visible Full-Free Lift Three-Stage Mast (FSV)

Model				8FGK25	8FDK25	8FGK25	8FDK25
Type of Mast				FV		FSV	
PERFORMANCE							
Speeds	Lifting	Full Load	mm/sec	560	550	560	550
		No Load	mm/sec	600	585	600	575
	Lowering	Full Load	mm/sec	480		480	
		No Load	mm/sec	420		450	
DIMENSIONS							
Load Distance (Centerline of front axle to front face of forks)			mm	430		455 (460) *	

NOTE: * Number shown in ( ) is when the forkbar width is other than 1020 mm.

RATED CAPACITIES *(April 2009)*

8FGK/8FDK25

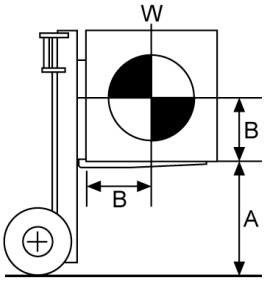

A: Max. Fork Height
B: Load Center
W: Capacity

V, FV Mast (PN)

Unit: kg (**W**)

A (mm)		4000	4500	5000
B (mm)	500	2500	2150	1700
	600	2260	1940	1530
	700	2060	1770	1400
	800	1900	1630	1290
	900	1750	1510	1190
	1000	1630	1400	1110
	1100	1530	1310	1040
	1200	1430	1230	970

V, FV Mast (PSC)

Unit: kg (**W**)

A (mm)		4000	4500	5000
B (mm)	500	2500	2300	1850
	600	2260	2080	1670
	700	2060	1900	1520
	800	1900	1740	1400
	900	1750	1610	1300
	1000	1630	1500	1210
	1100	1530	1400	1130
	1200	1430	1320	1060

FSV Mast (PN)

Unit: kg (**W**)

A (mm)		4000	4300	4500	4700	5000	5500	6000
B (mm)	500	2500	2300	2000	2000	1500	1250	850
	600	2260	2080	1810	1810	1350	1130	770
	700	2070	1900	1650	1650	1240	1030	700
	800	1900	1750	1520	1520	1140	950	640
	900	1770	1620	1410	1410	1060	880	600
	1000	1640	1510	1310	1310	980	820	560
	1100	1540	1420	1230	1230	920	770	520
	1200	1450	1330	1160	1160	870	720	490

FSV Mast (PSC)

Unit: kg (**W**)

A (mm)		4000	4300	4500	4700	5000	5500	6000
B (mm)	500	2500	2450	2150	2150	1650	1400	1000
	600	2260	2220	1940	1940	1490	1260	900
	700	2070	2030	1780	1780	1360	1160	820
	800	1900	1870	1640	1640	1260	1060	760
	900	1770	1730	1520	1520	1160	990	700
	1000	1640	1610	1410	1410	1080	920	650
	1100	1540	1510	1320	1320	1010	860	610
	1200	1450	1420	1240	1240	950	810	580

MAST SPECIFICATIONS & RATED CAPACITIES

(April 2009)

Wide Visible Mast (V), Wide Visible Full-Free Lift Two-Stage Mast (FV), Wide Visible Full-Free Lift Three-Stage Mast (FSV)

8FGK/8FDK25

Mast Type	Maximum Fork Height	Overall Height			Free Lift		Single Tire			
		Lowered	Extended		Without Load Backrest	With Standard Load Backrest	Tilt Range		Load Capacity at 500 mm LC	
			Without Load Backrest	With Standard Load Backrest			FWD	BWD	Pneumatic Tire	Pneumatic-Shaped Cushion Tire
	mm	mm	mm	mm	mm	mm	deg	deg	kg	kg
V	2700	1825	3375	3920	125	125	7	10	2500	2500
	3000	1975	3675	4220	125	125	7	10	2500	2500
	3300	2125	3975	4520	125	125	7	10	2500	2500
	3500	2225	4175	4720	125	125	7	10	2500	2500
	3700	2385	4375	4920	125	125	7	10	2500	2500
	4000	2575	4675	5220	125	125	7	5	2500	2500
	4500	2825	5175	5720	125	125	7	5	2150	2300
	5000	3075	5675	6220	125	125	7	5	1700	1850
FV	3000	1975	3610	4220	1370	765	7	10	2500	2500
	3300	2125	3910	4520	1520	915	7	10	2500	2500
	3500	2225	4110	4720	1620	1015	7	10	2500	2500
	3700	2385	4310	4920	1780	1175	7	10	2500	2500
	4000	2575	4610	5220	1970	1365	7	5	2500	2500
FSV	3700	1775	4350	4920	1130	565	7	5	2500	2500
	4000	1875	4650	5220	1230	665	7	5	2500	2500
	4300	1975	4950	5520	1330	765	7	5	2300	2450
	4500	2045	5150	5720	1400	835	7	5	2000	2150
	4700	2125	5350	5920	1480	915	7	5	2000	2150
	5000	2225	5650	6220	1580	1015	7	5	1500	1650
	5500	2385	6150	6720	1740	1175	7	5	1250	1400
	6000	2575	6650	7220	1930	1365	7	5	850	1000

NOTE: Height of standard load backrest is 1220 mm.

8FG25
8FD25

MAIN VEHICLE SPECIFICATIONS *(January 2016)*

1	Manufacturer				TOYOTA		TOYOTA	
2	Model				**30-8FG25**	**32-8FG25**	**60-8FD25**	**62-8FD25**
3	Load Capacity			kg	2500		2500	
4	Load Center			mm	500		500	
5	Power Type				Gasoline		Diesel	
6	Operator Position				Rider Seated		Rider Seated	
7	Tire Type		Front/Rear		Pneumatic		Pneumatic	
8	Wheels (x = driven)		Front/Rear		2x/2		2x/2	
9	Maximum Fork Height (MFH)			mm	3000		3000	
10	Free Lift			mm	155		155	
13	Fork Size		T x W x L	mm	42x120x1070		42x120x1070	
	Fork Spread (Outside)		MAX./MIN.	mm	1020/240		1020/240	
14	Tilt Range		FWD/BWD	deg	6/11		6/11	
15	Length to Fork Face			mm	2620		2620	
16	Overall Width			mm	1150		1150	
17	Mast Lowered Height			mm	1995		1995	
18	Mast Extended Height			mm	4220		4220	
19	Overhead Guard Height			mm	2110		2110	
21	Turning Radius (Outside)			mm	2280		2280	
22	Load Distance (Centerline of front axle to front face of forks)			mm	450 (455) **		450 (455) **	
	Rear Overhang			mm	520		520	
23	Basic Right Angle Stacking Aisle Width (Add load length and clearance)			mm	2730		2730	
24	Speeds	Travel, Max. (FWD/RVS)	Full Load	km/h	18.0/18.0	17.5/17.5	19.5/19.5	19.0/19.0 <17.0/17.0>
			No Load	km/h	18.5/18.5	18.0/18.0	20.0/20.0	19.5/19.5 <17.5/17.5>
25		Lifting	Full Load	mm/sec	600	600	615	615<560>
			No Load	mm/sec	640	640	655	655<600>
26		Lowering	Full Load	mm/sec	500	500	500	500<500>
			No Load	mm/sec	500	500	500	500<500>
28	Max. Drawbar Pull		Full Load	N (kg)	16500 (1680)	18500 (1890)	17500 (1780)	19000 (1940) <17400(1770)>
			No Load	N (kg)	8600 (880)	8500 (870)	8700 (890)	8700 (890) <8700(890)>
	Max. Drawbar Pull at 1.5km/h *		Full Load	N (kg)	—	17000 (1730)	—	17200 (1750) <15000(1530)>
29	Gradeability at 1.5 km/h *		Full Load	% (tanθ)	—	30	—	31<27>
30	Max. Gradeability *		Full Load	% (tanθ)	28	34	28	34<31>
			No Load	% (tanθ)	19	19	19	19<19>
32	Total Weight			kg	3560		3600	
33	Weight Distribution	Full Load	Front	kg	5280		5300	
			Rear	kg	780		800	
34		No Load	Front	kg	1300		1320	
			Rear	kg	2260		2280	
35	Tires	Number	Front/Rear		2/2		2/2	
36		Size	Front		7.00-12-12PR (I)		7.00-12-12PR (I)	
37			Rear		6.00-9-10PR (I)		6.00-9-10PR (I)	
38	Wheelbase			mm	1650		1650	
39	Tread		Front	mm	960		960	
			Rear	mm	965		965	
	Backrest Height			mm	1220		1220	
	Overhead Guard Clearance			mm	1055		1055	
	Counterweight Height			mm	1090		1090	
	Drawbar Pin Center Height			mm	310		310	
	Step Height/Floor Height			mm	435/675		435/675	
40	Underclearance	Min. <Mast>		mm	95		95	
41	(Full Load)	Center of Wheelbase		mm	140		140	
	Grade Clearance	Frame/Counterweight		% (tanθ)	51/41		51/41	
42	Brake	Service (Foot)			Hydraulic		Hydraulic	
43		Parking			Hand	Foot	Hand	Foot
45	Battery	Voltage/Capacity (5HR)		V/AH	12/27		12/55	
49	Internal Combustion Engine	Make/Model			TOYOTA/4Y		TOYOTA/1DZ-II [1DZ-III] *** <1DZ-III>****	
50		Rated Power/r.p.m.		kW (JIS ps)	40/2400 (54/2400)		44 (60) /2600 [41 (55) /2500]<36(49)/2400>	
51		Rated Torque/r.p.m.		N-m (JIS kg-m)	162/1800 (16.5/1800)		167 (17.0) /1600 [157 (16.0) /2500]<150(15.3)/2000>	
52		Number of Cylinder			4		4	
		Piston Displacement		cc	2237		2486	
		Fuel Tank Capacity		liter	60		60	
55	Transmission	Type			Manual	Powershift	Manual	Powershift
		Stage	FWD/RVS		2/2	1/1	2/2	1/1
57	Operating Pressure	For Attachments		Mpa (kg/cm^2)	15.7 (160)		15.7 (160)	

NOTE: * Computed values.
** Number shown in ( ) is when the forkbar width is other than 1020 mm.
*** 1DZ-II: Non-road Mobile Machinery (97/68/EC; Stage II) EPA Non-road Diesel Emissions (40 CFR Part 89; Interim Tier 2).
1DZ-III: Non-road Mobile Machinery (97/68/EC; Stage IIIA) EPA Non-road Diesel Emissions (40 CFR Part 1039; Interim Tier 4).
**** 1DZ-III:Non-road Mobile Machinery (GB20891-2014; StageIII,IV)

MAIN VEHICLE SPECIFICATIONS *(January 2016)*

1	Manufacturer				TOYOTA			TOYOTA
2	Model				**70-8FD25**		**72-8FD25**	**82-8FD25**
3	Load Capacity			kg	2500			2500
4	Load Center			mm	500			500
5	Power Type				Diesel			Diesel
6	Operator Position				Rider Seated			Rider Seated
7	Tire Type		Front/Rear		Pneumatic			Pneumatic
8	Wheels (x = driven)		Front/Rear		2x/2			2x/2
9	Maximum Fork Height (MFH)			mm	3000			3000
10	Free Lift			mm	155			155
13	Fork Size		T x W x L	mm	42x120x1070			42x120x1070
	Fork Spread (Outside)		MAX./MIN.	mm	1020/240			1020/240
14	Tilt Range		FWD/BWD	deg	6/11			6/11
15	Length to Fork Face			mm	2620			2620
16	Overall Width			mm	1150			1150
17	Mast Lowered Height			mm	1995			1995
18	Mast Extended Height			mm	4220			4220
19	Overhead Guard Height			mm	2110			2110
21	Turning Radius (Outside)			mm	2280			2280
22	Load Distance (Centerline of front axle to front face of forks)			mm	450 (455) **			450 (455) **
	Rear Overhang			mm	520			520
23	Basic Right Angle Stacking Aisle Width (Add load length and clearance)			mm	2730			2730
24	Speeds	Travel, Max. (FWD/RVS)	Full Load	km/h	19.0/19.0		19.0/19.0	19.0/19.0
			No Load	km/h	19.5/19.5		19.5/19.5	19.5/19.5
25		Lifting	Full Load	mm/sec	650		650	650
			No Load	mm/sec	675		675	675
26		Lowering	Full Load	mm/sec	500		500	500
			No Load	mm/sec	500		500	500
28	Max. Drawbar Pull		Full Load	N (kg)	19500 (1990)		20000 (2040)	20000 (2040)
			No Load	N (kg)	8800 (900)		8800 (900)	8800 (900)
	Max. Drawbar Pull at 1.5km/h *		Full Load	N (kg)	—		17500 (1780)	17500 (1780)
29	Gradeability at 1.5 km/h *		Full Load	% (tanθ)	—		29	29
30	Max. Gradeability *		Full Load	% (tanθ)	33		32	32
			No Load	% (tanθ)	19		19	19
32	Total Weight			kg	3650			3650
33	Weight Distribution	Full Load	Front	kg	5320			5320
			Rear	kg	830			830
34		No Load	Front	kg	1340			1340
			Rear	kg	2310			2310
35	Tires	Number	Front/Rear		2/2			2/2
36		Size	Front		7.00-12-12PR (I)			7.00-12-12PR (I)
37			Rear		6.00-9-10PR (I)			6.00-9-10PR (I)
38	Wheelbase			mm	1650			1650
39	Tread		Front	mm	960			960
			Rear	mm	965			965
	Backrest Height			mm	1220			1220
	Overhead Guard Clearance			mm	1055			1055
	Counterweight Height			mm	1090			1095
	Drawbar Pin Center Height			mm	310			310
	Step Height/Floor Height			mm	435/675			435/675
40	Underclearance	Min. <Mast>		mm	95			95
41	(Full Load)	Center of Wheelbase		mm	140			140
	Grade Clearance	Frame/Counterweight		% (tanθ)	51/41			51/41
42	Brake	Service (Foot)			Hydraulic			Hydraulic
43		Parking			Hand		Foot	Foot
45	Battery	Voltage/Capacity (5HR)		V/AH	12/64			12/70
49	Internal Combustion Engine	Make/Model			TOYOTA/2Z ***			TOYOTA/3Z
50		Rated Power/r.p.m.		kW (JIS ps)	49/2200 (66/2200)			42/2200 (57/2200)
51		Rated Torque/r.p.m.		N-m (JIS kg-m)	216/1600 (22.0/1600)			200/1600 (20.4/1600)
52		Number of Cylinder			4			4
		Piston Displacement		cc	3469			3469
		Fuel Tank Capacity		liter	60			60
55	Transmission	Type			Manual		Powershift	Powershift
		Stage	FWD/RVS		2/2		1/1	1/1
57	Operating Pressure	For Attachments		Mpa (kg/cm^2)	15.7 (160)			15.7 (160)

NOTE: * Computed values.
** Number shown in ( ) is when the forkbar width is other than 1020 mm.
*** 2Z: Non-road Mobile Machinery (97/68/EC; Stage II).

DIMENSIONAL DRAWINGS

(February 2011)

Unit: mm

8FG/8FD25

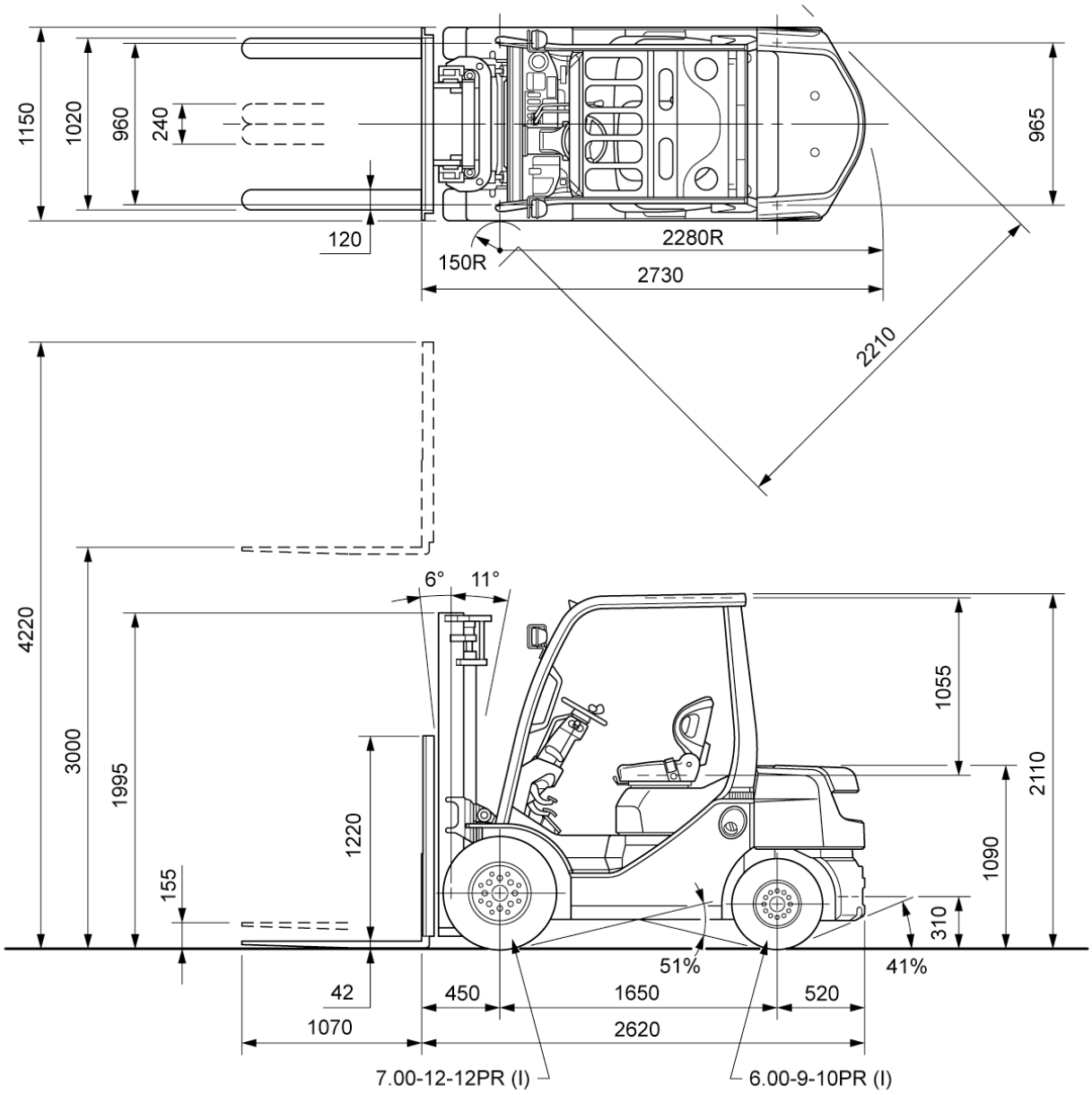

UNDERCLEARANCE

Mast (Full Load)---------- 95
Drive Axle (Full Load)---------- 130
Steer Axle (No Load)---------- 160
Center of Wheelbase (Full Load)--------- 140
Counterweight (No Load)---------- 150

SPECIAL TREAD

(February 2011)

Model		8FG/8FD25		
Front Tire	Single/Dual	Single	Dual	Dual
Front Tire Size		7.00-12-12PR (I)	5.50-15-8PR (I)	7.00-12-12PR (I)
Overall Width	mm	1150	1450	1610
Tread, Front	mm	960	1105	1190

SPECIAL MAST *(January 2016)*

Wide Visible Full-Free Lift Two-Stage Mast (FV), Wide Visible Full-Free Lift Three-Stage Mast (FSV)

Model				8FG25	60-8FD25 62-8FD25 <36kW>	70-8FD25 72-8FD25 82-8FD25	8FG25	60-8FD25 62-8FD25 <36kW>	70-8FD25 72-8FD25 82-8FD25
Type of Mast				FV			FSV		
PERFORMANCE									
Speeds	Lifting	Full Load	mm/sec	560	600<525>	625	560	590<530>	620
		No Load	mm/sec	600	640<565>	655	600	630<570>	645
	Lowering	Full Load	mm/sec	480			480		
		No Load	mm/sec	420			450		
DIMENSIONS									
Load Distance (Centerline of front axle to front face of forks)			mm	475			485 (490) *		

NOTE: * Number shown in ( ) is when the forkbar width is other than 1020 mm.

RATED CAPACITIES *(April 2009)*

8FG/8FD25

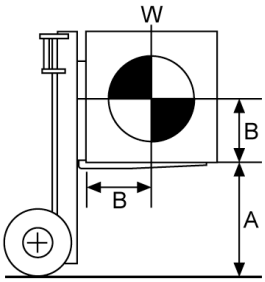

A: Max. Fork Height
B: Load Center
W: Capacity

V, FV Mast (PN)

Unit: kg (**W**)

A (mm)		4000	4500	5000
B (mm)	500	2500	2150 [2450]	1700 [2400]
	600	2260	1940 [2210]	1540 [2170]
	700	2070	1780 [2020]	1400 [1980]
	800	1900	1640 [1860]	1290 [1830]
	900	1760	1510 [1730]	1200 [1690]
	1000	1640	1410 [1610]	1110 [1580]
	1100	1540	1320 [1510]	1040 [1470]
	1200	1440	1240 [1410]	980 [1390]
	1300	1360	1170 [1330]	920 [1310]

[ ] for dual tire models.

V, FV Mast (PSC)

Unit: kg (**W**)

A (mm)		4000	4500	5000
B (mm)	500	2500	2300 [2450]	1850 [2400]
	600	2260	1940 [2210]	1540 [2170]
	700	2070	1780 [2020]	1400 [1980]
	800	1900	1640 [1860]	1290 [1830]
	900	1760	1510 [1730]	1200 [1690]
	1000	1640	1410 [1610]	1110 [1580]
	1100	1540	1320 [1510]	1040 [1470]
	1200	1440	1240 [1410]	980 [1390]
	1300	1360	1170 [1330]	920 [1310]

[ ] for dual tire models.

FSV Mast (PN)

Unit: kg (**W**)

A (mm)		4000	4300	4500	4700	5000	5500	6000	6500	7000
B (mm)	500	2500	2300 [2500]	2000 [2450]	2000 [2450]	1500 [2400]	1250 [2050]	900 [1700]	— [1550]	— [1200]
	600	2260	2080 [2260]	1810 [2220]	1810 [2220]	1360 [2170]	1130 [1860]	810 [1540]	— [1400]	— [1080]
	700	2070	1910 [2070]	1660 [2030]	1660 [2030]	1240 [1990]	1030 [1700]	740 [1410]	— [1280]	— [990]
	800	1910	1760 [1910]	1530 [1870]	1530 [1870]	1140 [1830]	950 [1560]	680 [1300]	— [1180]	— [910]
	900	1770	1630 [1770]	1420 [1730]	1420 [1730]	1060 [1700]	880 [1450]	630 [1200]	— [1100]	— [850]
	1000	1650	1520 [1650]	1320 [1620]	1320 [1620]	990 [1580]	820 [1350]	590 [1120]	— [1020]	— [790]
	1100	1550	1420 [1550]	1240 [1510]	1240 [1510]	930 [1480]	770 [1270]	550 [1050]	— [960]	— [740]
	1200	1450	1340 [1450]	1160 [1420]	1160 [1420]	870 [1400]	720 [1190]	520 [990]	— [900]	— [700]
	1300	1370	1260 [1370]	1100 [1340]	1100 [1340]	820 [1320]	680 [1120]	490 [930]	— [850]	— [660]

[ ] for dual tire models (PN or PSC).

FSV Mast (PSC)

Unit: kg (**W**)

A (mm)		5000	5500	6000
B (mm)	500	1650	1400	1050
	600	1490	1270	950
	700	1370	1160	870
	800	1260	1070	800
	900	1170	990	740
	1000	1090	920	690
	1100	1020	860	650
	1200	960	810	610
	1300	900	770	570

MAST SPECIFICATIONS & RATED CAPACITIES

(April 2009)

Wide Visible Mast (V), Wide Visible Full-Free Lift Two-Stage Mast (FV), Wide Visible Full-Free Lift Three-Stage Mast (FSV)

8FG/8FD25

Mast Type	Maximum Fork Height	Overall Height			Free Lift		Single Tire				Dual Tire			
		Lowered	Extended		Without Load Backrest	With Standard Load Backrest	Tilt Range		Load Capacity at 500 mm LC		Tilt Range		Load Capacity at 500 mm LC	
			Without Load Backrest	With Standard Load Backrest			FWD	BWD	Pneumatic Tire	Pneumatic-Shaped Cushion Tire	FWD	BWD	PneumaticTire/ Pneumatic-Shaped Cushion Tire	
	mm	mm	mm	mm	mm	mm	deg	deg	kg	kg	deg	deg	kg	
V	2700	1845	3370*	3920	150	150	6	11	2500	2500	6	11	2500	
	3000	1995	3670*	4220	150	150	6	11	2500	2500	6	11	2500	
	3300	2145	3970*	4520	150	150	6	11	2500	2500	6	11	2500	
	3500	2245	4170*	4720	150	150	6	11	2500	2500	6	11	2500	
	3700	2405	4370*	4920	150	150	6	11	2500	2500	6	11	2500	
	4000	2595	4670*	5220	150	150	6	9	2500	2500	6	11	2500	
	4500	2845	5170*	5720	150	150	6	6	2150	2300	6	11	2450	
	5000	3095	5670*	6220	150	150	6	6	1700	1850	6	6	2400	
FV	3000	1995	3605	4220	1400	780	6	11	2500	2500	6	11	2500	
	3300	2145	3905	4520	1550	930	6	11	2500	2500	6	11	2500	
	3500	2245	4105	4720	1650	1030	6	11	2500	2500	6	11	2500	
	3700	2405	4305	4920	1810	1190	6	11	2500	2500	6	11	2500	
	4000	2595	4605	5220	2000	1380	6	9	2500	2500	6	11	2500	
FSV	3700	1795	4265	4920	1235	580	6	6	2500	2500	6	6	2500	
	4000	1895	4565	5220	1335	680	6	6	2500	2500	6	6	2500	
	4300	1995	4865	5520	1435	780	6	6	2300	2300	6	6	2500	
	4500	2065	5065	5720	1505	850	6	6	2000	2000	6	6	2450	
	4700	2145	5265	5920	1585	930	6	6	2000	2000	6	6	2450	
	5000	2245	5565	6220	1685	1030	6	6	1500	1650	6	6	2400	
	5500	2405	6065	6720	1845	1190	6	6	1250	1400	6	6	2050	
	6000	2595	6565	7220	2035	1380	6	6	900	1050	6	6	1700	
	6500	2845	7065	7720	2285	1630	—	—	—	—	6	6	1550	
	7000	3095	7565	8220	2535	1880	—	—	—	—	6	6	1200	

NOTE: Height of standard load backrest is 1220 mm.
* with A4 piping, minus 15 mm.

8FGK30
8FDK30

MAIN VEHICLE SPECIFICATIONS *(May 2009)*

1	Manufacturer				TOYOTA	TOYOTA
2	Model				**32-8FGK30**	**62-8FDK30**
3	Load Capacity			kg	3000	3000
4	Load Center			mm	500	500
5	Power Type				Gasoline	Diesel
6	Operator Position				Rider Seated	Rider Seated
7	Tire Type		Front/Rear		Pneumatic	Pneumatic
8	Wheels (x = driven)		Front/Rear		2x/2	2x/2
9	Maximum Fork Height (MFH)			mm	3000	3000
10	Free Lift			mm	135	135
13	Fork Size		T x W x L	mm	45x120x1070	45x120x1070
	Fork Spread (Outside)		MAX./MIN.	mm	1020/240	1020/240
14	Tilt Range		FWD/BWD	deg	6/11	6/11
15	Length to Fork Face			mm	2505	2505
16	Overall Width			mm	1255	1255
17	Mast Lowered Height			mm	1980	1980
18	Mast Extended Height			mm	4220	4220
19	Overhead Guard Height			mm	2085	2085
21	Turning Radius (Outside)			mm	2130	2130
22	Load Distance (Centerline of front axle to front face of forks)			mm	460	460
	Rear Overhang			mm	560	560
23	Basic Right Angle Stacking Aisle Width (Add load length and clearance)			mm	2590	2590
24	Speeds	Travel, Max. (FWD/RVS)	Full Load	km/h	18.5/18.5	18.5/18.5
			No Load	km/h	19.0/19.5	19.0/19.0
25		Lifting	Full Load	mm/sec	490	500
			No Load	mm/sec	530	530
26		Lowering	Full Load	mm/sec	500	500
			No Load	mm/sec	500	500
28	Max. Drawbar Pull		Full Load	N (kg)	17000 (1730)	17500 (1780)
			No Load	N (kg)	7300 (740)	7300 (740)
	Max. Drawbar Pull at 1.5km/h *		Full Load	N (kg)	15600 (1590)	15500 (1580)
29	Gradeability at 1.5 km/h *		Full Load	% (tanθ)	24	24
30	Max. Gradeability *		Full Load	% (tanθ)	24	24
			No Load	% (tanθ)	14	14
32	Total Weight			kg	4150	4200
33	Weight Distribution	Full Load	Front	kg	6240	6330
			Rear	kg	910	870
34		No Load	Front	kg	1200	1290
			Rear	kg	2950	2910
35	Tires	Number	Front/Rear		2/2	2/2
36		Size	Front		23x9-10-16PR (I)	23x9-10-16PR (I)
37			Rear		18x7-8-16PR (I)	18x7-8-16PR (I)
38	Wheelbase			mm	1485	1485
39	Tread		Front	mm	1030	1030
			Rear	mm	940	940
	Backrest Height			mm	1220	1220
	Overhead Guard Clearance			mm	1055	1055
	Counterweight Height			mm	1215	1215
	Drawbar Pin Center Height			mm	285	285
	Step Height/Floor Height			mm	400/640	400/640
40	Underclearance	Min. <Mast>		mm	80	80
41	(Full Load)	Center of Wheelbase		mm	110	110
	Grade Clearance	Frame/Counterweight		% (tanθ)	45/33	45/33
42	Brake	Service (Foot)			Hydraulic	Hydraulic
43		Parking			Foot	Foot
45	Battery	Voltage/Capacity (5HR)		V/AH	12/27	12/55
49	Internal Combustion Engine	Make/Model			TOYOTA/4Y	TOYOTA/1DZ-II **
50		Rated Power/r.p.m.		kW (JIS ps)	40/2400 (54/2400)	40/2400 (55/2400)
51		Rated Torque/r.p.m.		N-m (JIS kg-m)	162/1800 (16.5/1800)	167/1600 (17.0/1600)
52		Number of Cylinder			4	4
		Piston Displacement		cc	2237	2486
		Fuel Tank Capacity		liter	55	55
55	Transmission	Type			Powershift	Powershift
		Stage	FWD/RVS		1/1	1/1
57	Operating Pressure	For Attachments		Mpa (kg/cm^2)	15.7 (160)	15.7 (160)

NOTE: * Computed values.
** 1DZ-II: Non-road Mobile Machinery (97/68/EC; Stage II) EPA Non-road Diesel Emissions (40 CFR Part 89; Interim Tier 2).

DIMENSIONAL DRAWINGS

(February 2011)

Unit: mm

8FGK/8FDK30

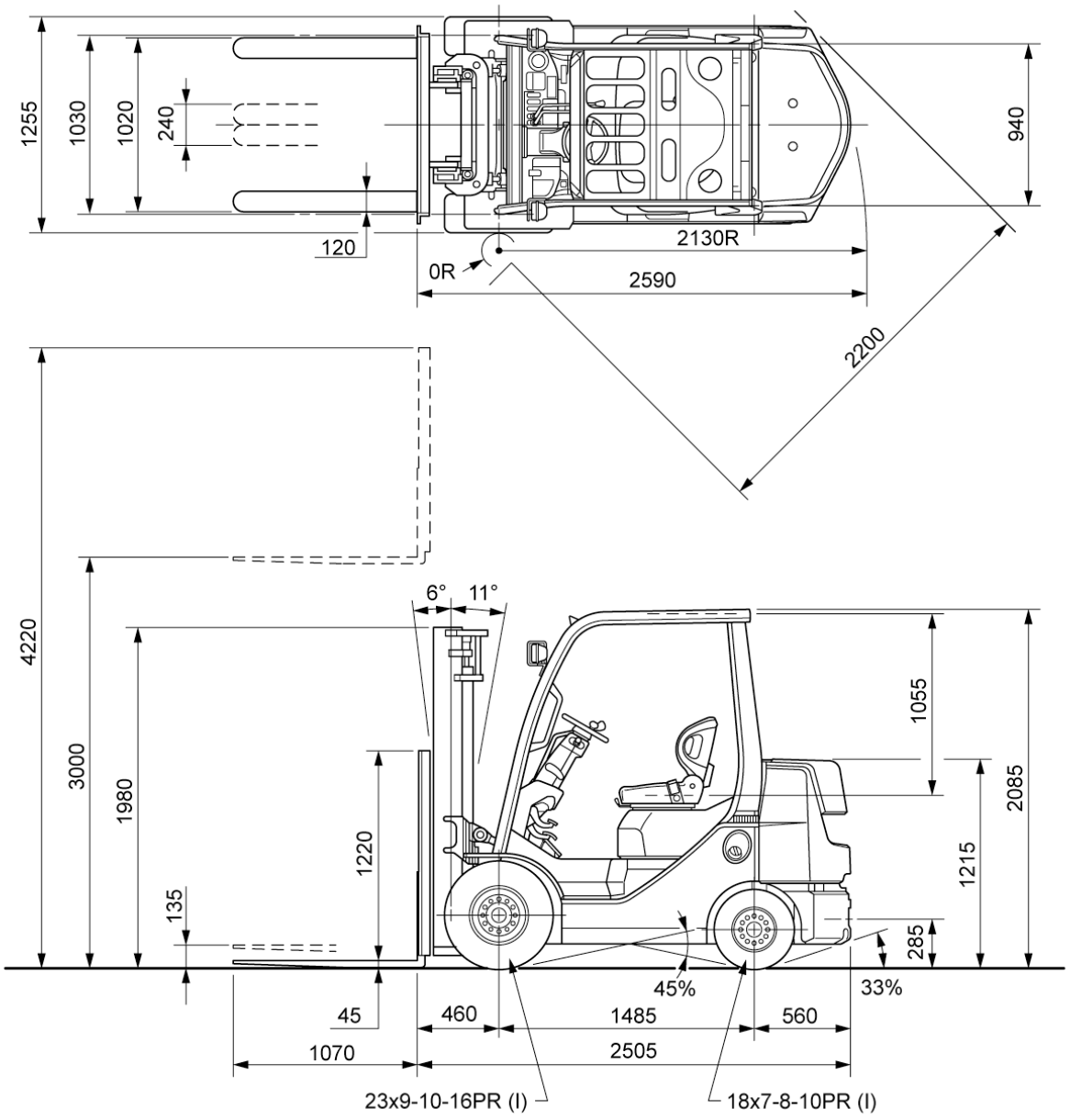

UNDERCLEARANCE

Mast (Full Load)	80
Drive Axle (Full Load)	90
Steer Axle (No Load)	130
Center of Wheelbase (Full Load)	110
Counterweight (No Load)	125

SPECIAL MAST *(February 2011)*

Wide Visible Full-Free Lift Two-Stage Mast (FV), Wide Visible Full-Free Lift Three-Stage Mast (FSV)

Model				8FGK30	8FDK30	8FGK30	8FDK30
Type of Mast				FV		FSV	
PERFORMANCE							
Speeds	Lifting	Full Load	mm/sec	445	420	460	430
		No Load	mm/sec	460	460	480	465
	Lowering	Full Load	mm/sec	460		460	
		No Load	mm/sec	390		420	
DIMENSIONS							
Load Distance (Centerline of front axle to front face of forks)			mm	460		480	

RATED CAPACITIES *(April 2009)*

8FGK/8FDK30

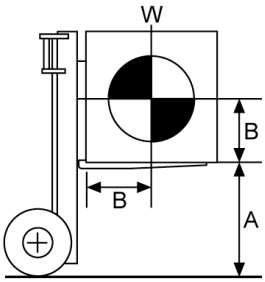

A: Max. Fork Height
B: Load Center
W: Capacity

V, FV Mast (PN)

Unit: kg (**W**)

A (mm)		4500	5000
B (mm)	500	3000	2600
	600	2720	2350
	700	2480	2150
	800	2290	1980
	900	2120	1840
	1000	1980	1710
	1100	1850	1600
	1200	1740	1510

V, FV Mast (PSC)

Unit: kg (**W**)

A (mm)		4500	5000
B (mm)	500	3000	2750
	600	2720	2490
	700	2480	2280
	800	2290	2100
	900	2120	1950
	1000	1980	1810
	1100	1850	1700
	1200	1740	1600

FSV Mast (PN)

Unit: kg (**W**)

A (mm)		4000	4300	4500	4700	5000	5500	6000
B (mm)	500	3000	2900	2800	2800	2400	1700	1200
	600	2720	2630	2540	2540	2170	1540	1080
	700	2490	2410	2320	2320	1990	1410	990
	800	2300	2220	2140	2140	1840	1300	920
	900	2130	2060	1990	1990	1700	1210	850
	1000	1990	1920	1860	1860	1590	1120	790
	1100	1860	1800	1740	1740	1490	1050	740
	1200	1750	1690	1640	1640	1400	990	700

FSV Mast (PSC)

Unit: kg (**W**)

A (mm)		4300	4500	4700	5000	5500	6000
B (mm)	500	3000	2850	2850	2550	1850	1350
	600	2720	2580	2580	2310	1680	1220
	700	2490	2370	2370	2120	1530	1120
	800	2300	2180	2180	1950	1410	1030
	900	2130	2020	2020	1810	1310	960
	1000	1990	1890	1890	1690	1220	890
	1100	1860	1770	1770	1580	1150	840
	1200	1750	1660	1660	1490	1080	790

MAST SPECIFICATIONS & RATED CAPACITIES *(April 2009)*

Wide Visible Mast (V), Wide Visible Full-Free Lift Two-Stage Mast (FV), Wide Visible Full-Free Lift Three-Stage Mast (FSV)

8FGK/8FDK30

Mast Type	Maximum Fork Height	Overall Height			Free Lift		Single Tire			
		Lowered	Extended		Without Load Backrest	With Standard Load Backrest	Tilt Range		Load Capacity at 500 mm LC	
			Without Load Backrest	With Standard Load Backrest			FWD	BWD	Pneumatic Tire	Pneumatic-Shaped Cushion Tire
	mm	mm	mm	mm	mm	mm	deg	deg	kg	kg
V	2700	1830	3405*	3920	135	135	6	11	3000	3000
	3000	1980	3705*	4220	135	135	6	11	3000	3000
	3300	2130	4005*	4520	135	135	6	11	3000	3000
	3500	2230	4205*	4720	135	135	6	11	3000	3000
	3700	2390	4405*	4920	135	135	6	11	3000	3000
	4000	2580	4705*	5220	135	135	6	11	3000	3000
	4500	2830	5205*	5720	135	135	6	6	3000	3000
	5000	3080	5705*	6220	135	135	6	6	2600	2750
FV	3000	1980	3585	4220	1400	760	6	11	3000	3000
	3300	2130	3885	4520	1550	955	6	11	3000	3000
	3500	2230	4085	4720	1650	1055	6	11	3000	3000
	3700	2390	4285	4920	1810	1215	6	11	3000	3000
	4000	2580	4585	5220	2000	1405	6	11	3000	3000
FSV	3700	1880	4285	4920	1300	660	6	6	3000	3000
	4000	1980	4585	5220	1400	760	6	6	3000	3000
	4300	2130	4885	5520	1550	910	6	6	2900	3000
	4500	2180	5085	5720	1600	960	6	6	2800	2850
	4700	2230	5285	5920	1650	1010	6	6	2800	2850
	5000	2390	5585	6220	1810	1170	6	6	2400	2550
	5500	2580	6085	6720	2000	1360	6	6	1700	1850
	6000	2830	6585	7220	2250	1610	6	6	1200	1350

NOTE: Height of standard load backrest is 1220 mm.
* with A4 piping, minus 20 mm.

8FG30
8FD30

MAIN VEHICLE SPECIFICATIONS *(January 2016)*

1	Manufacturer				TOYOTA		TOYOTA	
2	Model				**30-8FG30**	**32-8FG30**	**60-8FD30**	**62-8FD30**
3	Load Capacity			kg	3000		3000	
4	Load Center			mm	500		500	
5	Power Type				Gasoline		Diesel	
6	Operator Position				Rider Seated		Rider Seated	
7	Tire Type		Front/Rear		Pneumatic		Pneumatic	
8	Wheels (x = driven)		Front/Rear		2x/2		2x/2	
9	Maximum Fork Height (MFH)			mm	3000		3000	
10	Free Lift			mm	135		135	
13	Fork Size		T x W x L	mm	45x120x1070		45x120x1070	
	Fork Spread (Outside)		MAX./MIN.	mm	1070/240		1070/240	
14	Tilt Range		FWD/BWD	deg	6/11		6/11	
15	Length to Fork Face			mm	2775		2775	
16	Overall Width			mm	1240		1240	
17	Mast Lowered Height			mm	2015		2015	
18	Mast Extended Height			mm	4220		4220	
19	Overhead Guard Height			mm	2170		2170	
21	Turning Radius (Outside)			mm	2430		2430	
22	Load Distance (Centerline of front axle to front face of forks)			mm	485		485	
	Rear Overhang			mm	595		595	
23	Basic Right Angle Stacking Aisle Width (Add load length and clearance)			mm	2915		2915	
24	Speeds	Travel, Max. (FWD/RVS)	Full Load	km/h	18.5/18.5	18.5/18.5	19.5/19.5	17.5/17.5 <16.0/16.0>
			No Load	km/h	19.0/19.0	19.0/19.0	20.0/20.0	18.0/18.0 <16.5/16.5>
25		Lifting	Full Load	mm/sec	510	510	500	500<440>
			No Load	mm/sec	550	550	530	530<470>
26		Lowering	Full Load	mm/sec	500	500	500	500<500>
			No Load	mm/sec	500	550	500	500<500>
28	Max. Drawbar Pull		Full Load	N (kg)	16800 (1710)	18000 (1840)	16700 (1700)	19600 (2000) <18400(1880)>
			No Load	N (kg)	10300 (1050)	10300 (1050)	10400 (1060)	10400 (1060) <10400(1060)>
	Max. Drawbar Pull at 1.5km/h *		Full Load	N (kg)	—	15300 (1560)	—	17600 (1790) <15500(1530)>
29	Gradeability at 1.5 km/h *		Full Load	% (tanθ)	—	22	—	25<24>
30	Max. Gradeability *		Full Load	% (tanθ)	23	25	23	28<27>
			No Load	% (tanθ)	20	20	20	20<20>
32	Total Weight			kg	4190		4230	
33	Weight Distribution	Full Load	Front	kg	6210		6240	
			Rear	kg	980		990	
34		No Load	Front	kg	1470		1510	
			Rear	kg	2720		2720	
35	Tires	Number	Front/Rear		2/2		2/2	
36		Size	Front		28x9-15-12PR (I)		28x9-15-12PR (I)	
37			Rear		6.5-10-10PR (I)		6.5-10-10PR (I)	
38	Wheelbase			mm	1700		1700	
39	Tread		Front	mm	1010		1010	
			Rear	mm	965		965	
	Backrest Height			mm	1220		1220	
	Overhead Guard Clearance			mm	1055		1055	
	Counterweight Height			mm	1130		1130	
	Drawbar Pin Center Height			mm	335		335	
	Step Height/Floor Height			mm	495/730		495/730	
40	Underclearance	Min. <Mast>		mm	115		115	
41	(Full Load)	Center of Wheelbase		mm	185		185	
	Grade Clearance	Frame/Counterweight		% (tanθ)	62/49		62/49	
42	Brake	Service (Foot)			Hydraulic		Hydraulic	
43		Parking			Hand	Foot	Hand	Foot
45	Battery	Voltage/Capacity (5HR)		V/AH	12/27		12/55	
49	Internal Combustion Engine	Make/Model			TOYOTA/4Y		TOYOTA/1DZ-II [1DZ-III] ** <1DZ-III>***	
50		Rated Power/r.p.m.		kW (JIS ps)	43/2600 (58/2600)		44 (60) /2600 [41 (55) /2500] <36(49)/2400>	
51		Rated Torque/r.p.m.		N-m (JIS kg-m)	162/1800 (16.5/1800)		167 (17.0) /1600 [157 (16.0) /2500] <150(15.3)/2000>	
52		Number of Cylinder			4		4	
		Piston Displacement		cc	2237		2486	
		Fuel Tank Capacity		liter	60		60	
55	Transmission	Type			Manual	Powershift	Manual	Powershift
		Stage	FWD/RVS		2/2	1/1	2/2	1/1

57	Operating Pressure	For Attachments	Mpa (kg/cm^2)	15.7 (160)	15.7 (160)

NOTE: * Computed values.
** 1DZ-II: Non-road Mobile Machinery (97/68/EC; Stage II) EPA Non-road Diesel Emissions (40 CFR Part 89; Interim Tier 2).
1DZ-III: Non-road Mobile Machinery (97/68/EC; Stage IIIA) EPA Non-road Diesel Emissions (40 CFR Part 1039; Interim Tier 4).
*** 1DZ-III: Non-road Mobile Machinery (GB20891-2014; Stage III,IV)

MAIN VEHICLE SPECIFICATIONS *(January 2016)*

1	Manufacturer				TOYOTA		TOYOTA
2	Model				**70-8FD30**	**72-8FD30**	**82-8FD30**
3	Load Capacity			kg	3000		3000
4	Load Center			mm	500		500
5	Power Type				Diesel		Diesel
6	Operator Position				Rider Seated		Rider Seated
7	Tire Type		Front/Rear		Pneumatic		Pneumatic
8	Wheels (x = driven)		Front/Rear		2x/2		2x/2
9	Maximum Fork Height (MFH)			mm	3000		3000
10	Free Lift			mm	135		135
13	Fork Size		T x W x L	mm	45x120x1070		45x120x1070
	Fork Spread (Outside)		MAX./MIN.	mm	1070/240		1070/240
14	Tilt Range		FWD/BWD	deg	6/11		6/11
15	Length to Fork Face			mm	2775		2775
16	Overall Width			mm	1240		1240
17	Mast Lowered Height			mm	2015		2015
18	Mast Extended Height			mm	4220		4220
19	Overhead Guard Height			mm	2170		2170
21	Turning Radius (Outside)			mm	2430		2430
22	Load Distance (Centerline of front axle to front face of forks)			mm	485		485
	Rear Overhang			mm	595		595
23	Basic Right Angle Stacking Aisle Width (Add load length and clearance)			mm	2915		2915
24	Speeds	Travel, Max. (FWD/RVS)	Full Load	km/h	19.5/19.5	18.5/18.5	18.5/18.5
			No Load	km/h	20.0/20.0	19.0/19.0	19.0/19.0
25		Lifting	Full Load	mm/sec	550	550	550
			No Load	mm/sec	570	570	570
26		Lowering	Full Load	mm/sec	500	500	500
			No Load	mm/sec	500	500	500
28	Max. Drawbar Pull		Full Load	N (kg)	19700 (2010)	19500 (1990)	19500 (1990)
			No Load	N (kg)	10600 (1080)	10600 (1080)	10600 (1080)
	Max. Drawbar Pull at 1.5km/h *		Full Load	N (kg)	—	17000 (1730)	17000 (1730)
29	Gradeability at 1.5 km/h *		Full Load	% (tanθ)	—	24	24
30	Max. Gradeability *		Full Load	% (tanθ)	27	27	27
			No Load	% (tanθ)	20	20	20
32	Total Weight			kg	4290		4290
33	Weight Distribution	Full Load	Front	kg	6270		6270
			Rear	kg	1020		1020
34		No Load	Front	kg	1530		1530
			Rear	kg	2760		2760
35	Tires	Number	Front/Rear		2/2		2/2
36		Size	Front		28x9-15-12PR (I)		28x9-15-12PR (I)
37			Rear		6.5-10-10PR (I)		6.5-10-10PR (I)
38	Wheelbase			mm	1700		1700
39	Tread		Front	mm	1010		1010
			Rear	mm	965		965
	Backrest Height			mm	1220		1220
	Overhead Guard Clearance			mm	1055		1055
	Counterweight Height			mm	1130		1130
	Drawbar Pin Center Height			mm	335		335
	Step Height/Floor Height			mm	495/730		495/730
40	Underclearance	Min. <Mast>		mm	115		115
41	(Full Load)	Center of Wheelbase		mm	185		185
	Grade Clearance	Frame/Counterweight		% (tanθ)	62/49		62/49
42	Brake	Service (Foot)			Hydraulic		Hydraulic
43		Parking			Hand	Foot	Foot
45	Battery	Voltage/Capacity (5HR)		V/AH	12/64		12/70
49	Internal Combustion Engine	Make/Model			TOYOTA/2Z **		TOYOTA/3Z
50		Rated Power/r.p.m.		kW (JIS ps)	49/2200 (66/2200)		42/2200 (57/2200)
51		Rated Torque/r.p.m.		N-m (JIS kg-m)	216/1600 (22.0/1600)		200/1600 (20.4/1600)
52		Number of Cylinder			4		4
		Piston Displacement		cc	3469		3469
		Fuel Tank Capacity		liter	60		60
55	Transmission	Type			Manual	Powershift	Powershift
		Stage	FWD/RVS		2/2	1/1	1/1
57	Operating Pressure	For Attachments		Mpa (kg/cm^2)	15.7 (160)		15.7 (160)

NOTE: * Computed values.
** 2Z: Non-road Mobile Machinery (97/68/EC; Stage II).

DIMENSIONAL DRAWINGS

(February 2011)

Unit: mm

8FG/8FD30

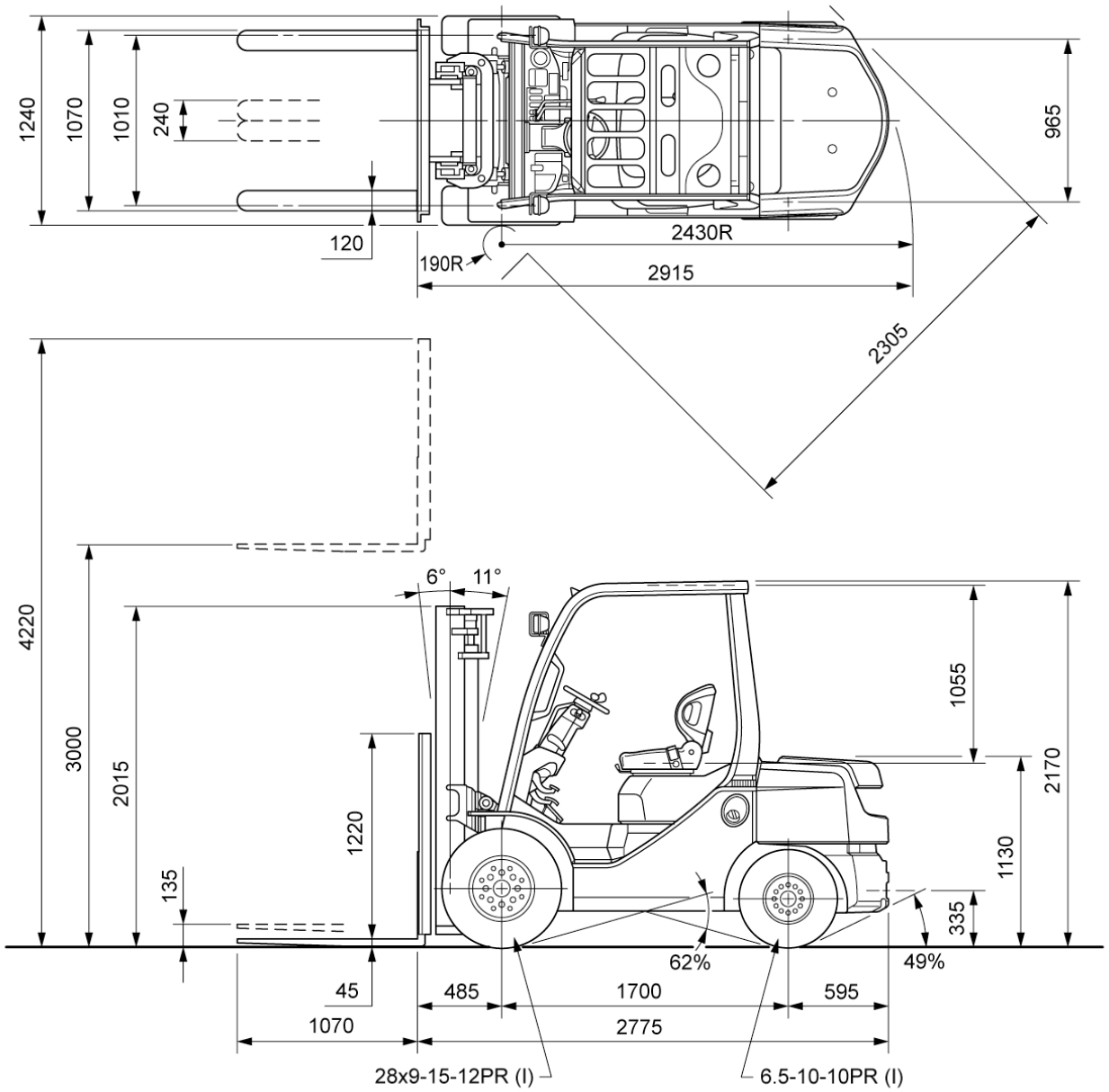

UNDERCLEARANCE

Mast (Full Load)---------- 115
Drive Axle (Full Load)---------- 130
Steer Axle (No Load)---------- 180
Center of Wheelbase (Full Load)--------- 185
Counterweight (No Load)---------- 175

SPECIAL TREAD

(February 2011)

Model		8FG/8FD30	
Front Tire	Single/Dual	Dual	Dual
Front Tire Size		6.00-15-10PR (I)	28x8-15-12PR (I)
Overall Width	mm	1520	1675
Tread, Front	mm	1150	1240

SPECIAL MAST *(January 2016)*

Wide Visible Full-Free Lift Two-Stage Mast (FV), Wide Visible Full-Free Lift Three-Stage Mast (FSV)

Model				8FG30	60-8FD30 62-8FD30 <36kW>	70-8FD30 72-8FD30 82-8FD30	8FG30	60-8FD30 62-8FD30 <36kW>	70-8FD30 72-8FD30 82-8FD30
Type of Mast				FV			FSV		
PERFORMANCE									
Speeds	Lifting	Full Load	mm/sec	450	445<400>	480	480	470<415>	510
		No Load	mm/sec	490	480<430>	500	520	500<445>	530
	Lowering	Full Load	mm/sec	460			460		
		No Load	mm/sec	390			420		
DIMENSIONS									
Load Distance (Centerline of front axle to front face of forks)			mm	485			495		

RATED CAPACITIES *(April 2009)*

8FG/8FD30

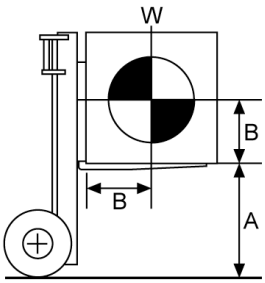

A: Max. Fork Height
B: Load Center
W: Capacity

V, FV Mast (PN)

Unit: kg (**W**)

A (mm)		4500	5000
B (mm)	500	3000	2600 [3000]
	600	2720	2360 [2720]
	700	2500	2160 [2500]
	800	2310	2000 [2310]
	900	2140	1850 [2140]
	1000	2000	1730 [2000]
	1100	1870	1620 [1870]
	1200	1760	1530 [1760]
	1300	1670	1440 [1670]

[ ] for dual tire models.

V, FV Mast (PSC)

Unit: kg (**W**)

A (mm)		4500	5000
B (mm)	500	3000	2750 [3000]
	600	2720	2500 [2720]
	700	2500	2290 [2500]
	800	2310	2110 [2310]
	900	2140	1960 [2140]
	1000	2000	1830 [2000]
	1100	1870	1720 [1870]
	1200	1760	1620 [1760]
	1300	1670	1530 [1670]

[ ] for dual tire models.

FSV Mast (PN)

Unit: kg (**W**)

A (mm)		4700	5000	5500	6000	6500	7000
B (mm)	500	3000	2600 [2950]	1900 [2650]	1500 [2050]	— [1600]	— [1200]
	600	2730	2360 [2680]	1730 [2410]	1360 [1860]	— [1450]	— [1090]
	700	2500	2170 [2460]	1580 [2210]	1250 [1710]	— [1330]	— [1000]
	800	2310	2000 [2270]	1460 [2040]	1150 [1580]	— [1230]	— [920]
	900	2150	1860 [2110]	1360 [1900]	1070 [1470]	— [1140]	— [860]
	1000	2010	1740 [1970]	1270 [1770]	1000 [1370]	— [1070]	— [800]
	1100	1880	1630 [1850]	1190 [1660]	940 [1290]	— [1000]	— [750]
	1200	1770	1540 [1740]	1120 [1570]	880 [1210]	— [940]	— [710]
	1300	1680	1450 [1650]	1060 [1480]	840 [1140]	— [890]	— [670]

[ ] for dual tire models (PN or PSC).

FSV Mast (PSC)

Unit: kg (**W**)

A (mm)		4700	5000	5500	6000
B (mm)	500	3000	2750	2050	1650
	600	2730	2500	1860	1500
	700	2500	2290	1710	1370
	800	2310	2120	1580	1270
	900	2150	1970	1470	1180
	1000	2010	1840	1370	1100
	1100	1880	1730	1290	1030
	1200	1770	1630	1210	970
	1300	1680	1540	1140	920

MAST SPECIFICATIONS & RATED CAPACITIES

(April 2009)

Wide Visible Mast (V), Wide Visible Full-Free Lift Two-Stage Mast (FV), Wide Visible Full-Free Lift Three-Stage Mast (FSV)

8FG/8FD30

Mast Type	Maximum Fork Height	Overall Height			Free Lift		Single Tire				Dual Tire			
		Lowered	Extended		Without Load Backrest	With Standard Load Backrest	Tilt Range		Load Capacity at 500 mm LC		Tilt Range		Load Capacity at 500 mm LC	
			Without Load Backrest	With Standard Load Backrest			FWD	BWD	Pneumatic Tire	Pneumatic-Shaped Cushion Tire	FWD	BWD	PneumaticTire/ Pneumatic-Shaped Cushion Tire	
	mm	mm	mm	mm	mm	mm	deg	deg	kg	kg	deg	deg	kg	
V	2700	1865	3440*	3920	135	135	6	11	3000	3000	6	11	3000	
	3000	2015	3740*	4220	135	135	6	11	3000	3000	6	11	3000	
	3300	2165	4040*	4520	135	135	6	11	3000	3000	6	11	3000	
	3500	2265	4240*	4720	135	135	6	11	3000	3000	6	11	3000	
	3700	2425	4440*	4920	135	135	6	11	3000	3000	6	11	3000	
	4000	2615	4740*	5220	135	135	6	11	3000	3000	6	11	3000	
	4500	2865	5240*	5720	135	135	6	6	3000	3000	6	11	3000	
	5000	3115	5740*	6220	135	135	6	6	2600	2750	6	6	3000	
FV	3000	2015	3615	4220	1400	795	6	11	3000	3000	6	11	3000	
	3300	2165	3915	4520	1550	945	6	11	3000	3000	6	11	3000	
	3500	2265	4115	4720	1650	1045	6	11	3000	3000	6	11	3000	
	3700	2425	4315	4920	1810	1205	6	11	3000	3000	6	11	3000	
	4000	2615	4615	5220	2000	1395	6	11	3000	3000	6	11	3000	
FSV	3700	1915	4315	4920	1300	695	6	6	3000	3000	6	6	3000	
	4000	2015	4615	5220	1400	795	6	6	3000	3000	6	6	3000	
	4300	2165	4915	5520	1550	945	6	6	3000	3000	6	6	3000	
	4500	2215	5115	5720	1600	995	6	6	3000	3000	6	6	3000	
	4700	2265	5315	5920	1650	1045	6	6	3000	3000	6	6	3000	
	5000	2425	5615	6220	1810	1205	6	6	2600	2750	6	6	2950	
	5500	2615	6115	6720	2000	1395	6	6	1900	2050	6	6	2650	
	6000	2865	6615	7220	2250	1645	6	6	1500	1650	6	6	2050	
	6500	3115	7115	7720	2500	1895	—	—	—	—	6	6	1600	
	7000	3365	7615	8220	2750	2145	—	—	—	—	6	6	1200	

NOTE: Height of standard load backrest is 1220 mm.
* with A4 piping, minus 20 mm.

8FGJ35
8FDJ35

MAIN VEHICLE SPECIFICATIONS *(January 2016)*

1	Manufacturer				TOYOTA		TOYOTA
2	Model				**30-8FGJ35**	**32-8FGJ35**	**62-8FDJ35**
3	Load Capacity			kg	3500		3500
4	Load Center			mm	500		500
5	Power Type				Gasoline		Diesel
6	Operator Position				Rider Seated		Rider Seated
7	Tire Type		Front/Rear		Pneumatic		Pneumatic
8	Wheels (x = driven)		Front/Rear		2x/2		2x/2
9	Maximum Fork Height (MFH)			mm	3000		3000
10	Free Lift			mm	140		140
13	Fork Size		T x W x L	mm	50x140x1070		50x140x1070
	Fork Spread (Outside)		MAX./MIN.	mm	1070/280		1070/280
14	Tilt Range		FWD/BWD	deg	6/11		6/11
15	Length to Fork Face			mm	2845		2845
16	Overall Width			mm	1290		1290
17	Mast Lowered Height			mm	2120		2120
18	Mast Extended Height			mm	4220		4220
19	Overhead Guard Height			mm	2180		2180
21	Turning Radius (Outside)			mm	2490		2490
22	Load Distance (Centerline of front axle to front face of forks)			mm	500		500
	Rear Overhang			mm	650		650
23	Basic Right Angle Stacking Aisle Width (Add load length and clearance)			mm	2990		2990
24	Speeds	Travel, Max. (FWD/RVS)	Full Load	km/h	19.0/19.0	19.0/19.0	18.0/18.0<16.5/16.5>
			No Load	km/h	19.5/19.5	19.5/19.5	18.5/18.5<17.0/17.0>
25		Lifting	Full Load	mm/sec	410	410	410<370>
			No Load	mm/sec	450	450	450<400>
26		Lowering	Full Load	mm/sec	500	500	500<500>
			No Load	mm/sec	450	450	450<450>
28	Max. Drawbar Pull		Full Load	N (kg)	16500 (1680)	17000 (1730)	18600 (1900)<17100(1740)>
			No Load	N (kg)	10500 (1070)	10500 (1070)	10600 (1080)<10600(1080)>
	Max. Drawbar Pull at 1.5km/h *		Full Load	N (kg)	—	13900 (1420)	16500 (1680)<14500(1480)>
29	Gradeability at 1.5 km/h *		Full Load	% (tanθ)	—	19	20<19>
30	Max. Gradeability *		Full Load	% (tanθ)	20	21	22<21>
			No Load	% (tanθ)	18	18	19<19>
32	Total Weight			kg	4770		4810
33	Weight Distribution	Full Load	Front	kg	7200		7210
			Rear	kg	1070		1100
34		No Load	Front	kg	1640		1660
			Rear	kg	3130		3150
35	Tires	Number	Front/Rear		2/2		2/2
36		Size	Front		250-15-16PR (I)		250-15-16PR (I)
37			Rear		6.5-10-12PR (I)		6.5-10-12PR (I)
38	Wheelbase			mm	1700		1700
39	Tread		Front	mm	1060		1060
			Rear	mm	965		965
	Backrest Height			mm	1220		1220
	Overhead Guard Clearance			mm	1055		1055
	Counterweight Height			mm	1130		1130
	Drawbar Pin Center Height			mm	335		335
	Step Height/Floor Height			mm	505/745		505/745
40	Underclearance	Min. <Mast>		mm	130		130
41	(Full Load)	Center of Wheelbase		mm	190		190
	Grade Clearance	Frame/Counterweight		% (tanθ)	64/43		64/43
42	Brake	Service (Foot)			Hydraulic		Hydraulic
43		Parking			Hand	Foot	Foot
45	Battery	Voltage/Capacity (5HR)		V/AH	12/27		12/55
49	Internal Combustion Engine	Make/Model			TOYOTA/4Y		TOYOTA/1DZ-II [1DZ-III] **<1DZ-III>***
50		Rated Power/r.p.m.		kW (JIS ps)	43/2600 (58/2600)		44 (60) /2600 [41 (55) /2500] <36/2400(49/2400)>
51		Rated Torque/r.p.m.		N-m (JIS kg-m)	162/1800 (16.5/1800)		167 (17.0) /1600 [157 (16.0) /2500] <150/2000(15.3/2000)>
52		Number of Cylinder			4		4
		Piston Displacement		cc	2237		2486
		Fuel Tank Capacity		liter	60		60
55	Transmission	Type			Manual	Powershift	Powershift
		Stage	FWD/RVS		2/2	1/1	1/1
57	Operating Pressure	For Attachments		Mpa (kg/cm^2)	15.7 (160)		15.7 (160)

NOTE: * Computed values.
** 1DZ-II: Non-road Mobile Machinery (97/68/EC; Stage II) EPA Non-road Diesel Emissions (40 CFR Part 89; Interim Tier 2).
1DZ-III: Non-road Mobile Machinery (97/68/EC; Stage IIIA) EPA Non-road Diesel Emissions (40 CFR Part 1039; Interim Tier 4).
*** 1DZ-III: Non-road Mobile Machinery (GB20891-2014; StageIII,IV)

MAIN VEHICLE SPECIFICATIONS *(January 2016)*

1	Manufacturer				TOYOTA		TOYOTA
2	Model				**70-8FDJ35**	**72-8FDJ35**	**82-8FDJ35**
3	Load Capacity			kg	3500		3500
4	Load Center			mm	500		500
5	Power Type				Diesel		Diesel
6	Operator Position				Rider Seated		Rider Seated
7	Tire Type		Front/Rear		Pneumatic		Pneumatic
8	Wheels (x = driven)		Front/Rear		2x/2		2x/2
9	Maximum Fork Height (MFH)			mm	3000		3000
10	Free Lift			mm	140		140
13	Fork Size		T x W x L	mm	50x140x1070		50x140x1070
	Fork Spread (Outside)		MAX./MIN.	mm	1070/280		1070/280
14	Tilt Range		FWD/BWD	deg	6/11		6/11
15	Length to Fork Face			mm	2845		2845
16	Overall Width			mm	1290		1290
17	Mast Lowered Height			mm	2120		2120
18	Mast Extended Height			mm	4220		4220
19	Overhead Guard Height			mm	2180		2180
21	Turning Radius (Outside)			mm	2490		2490
22	Load Distance (Centerline of front axle to front face of forks)			mm	500		500
	Rear Overhang			mm	650		650
23	Basic Right Angle Stacking Aisle Width (Add load length and clearance)			mm	2990		2990
24	Speeds	Travel, Max. (FWD/RVS)	Full Load	km/h	19.0/19.0	19.0/19.0	19.0/19.0
			No Load	km/h	19.5/19.5	19.5/19.5	19.5/19.5
25		Lifting	Full Load	mm/sec	440	440	440
			No Load	mm/sec	460	460	460
26		Lowering	Full Load	mm/sec	500	500	500
			No Load	mm/sec	450	450	450
28	Max. Drawbar Pull		Full Load	N (kg)	19500 (1990)	18500 (1890)	18500 (1890)
			No Load	N (kg)	10700 (1090)	10700 (1090)	10700 (1090)
	Max. Drawbar Pull at 1.5km/h *		Full Load	N (kg)	—	16000 (1630)	16000 (1630)
29	Gradeability at 1.5 km/h *		Full Load	% (tanθ)	—	20	20
30	Max. Gradeability *		Full Load	% (tanθ)	24	22	22
			No Load	% (tanθ)	19	19	19
32	Total Weight			kg	4870		4870
33	Weight Distribution	Full Load	Front	kg	7240		7240
			Rear	kg	1130		1130
34		No Load	Front	kg	1680		1680
			Rear	kg	3190		3190
35	Tires	Number	Front/Rear		2/2		2/2
36		Size	Front		250-15-16PR (I)		250-15-16PR (I)
37			Rear		6.5-10-12PR (I)		6.5-10-12PR (I)
38	Wheelbase			mm	1700		1700
39	Tread		Front	mm	1060		1060
			Rear	mm	965		965
	Backrest Height			mm	1220		1220
	Overhead Guard Clearance			mm	1055		1055
	Counterweight Height			mm	1130		1130
	Drawbar Pin Center Height			mm	335		335
	Step Height/Floor Height			mm	505/745		505/745
40	Underclearance	Min. <Mast>		mm	130		130
41	(Full Load)	Center of Wheelbase		mm	190		190
	Grade Clearance	Frame/Counterweight		% (tanθ)	64/43		64/43
42	Brake	Service (Foot)			Hydraulic		Hydraulic
43		Parking			Hand	Foot	Foot
45	Battery	Voltage/Capacity (5HR)		V/AH	12/64		12/70
49	Internal Combustion Engine	Make/Model			TOYOTA/2Z **		TOYOTA/3Z
50		Rated Power/r.p.m.		kW (JIS ps)	49/2200 (66/2200)		42/2200 (57/2200)
51		Rated Torque/r.p.m.		N-m (JIS kg-m)	216/1600 (22.0/1600)		200/1600 (20.4/1600)
52		Number of Cylinder			4		4
		Piston Displacement		cc	3469		3469
		Fuel Tank Capacity		liter	60		60
55	Transmission	Type			Manual	Powershift	Powershift
		Stage	FWD/RVS		2/2	1/1	1/1
57	Operating Pressure	For Attachments		Mpa (kg/cm^2)	15.7 (160)		15.7 (160)

NOTE: * Computed values.
** 2Z: Non-road Mobile Machinery (97/68/EC; Stage II).

DIMENSIONAL DRAWINGS

(February 2011)

Unit: mm

8FGJ/8FDJ35

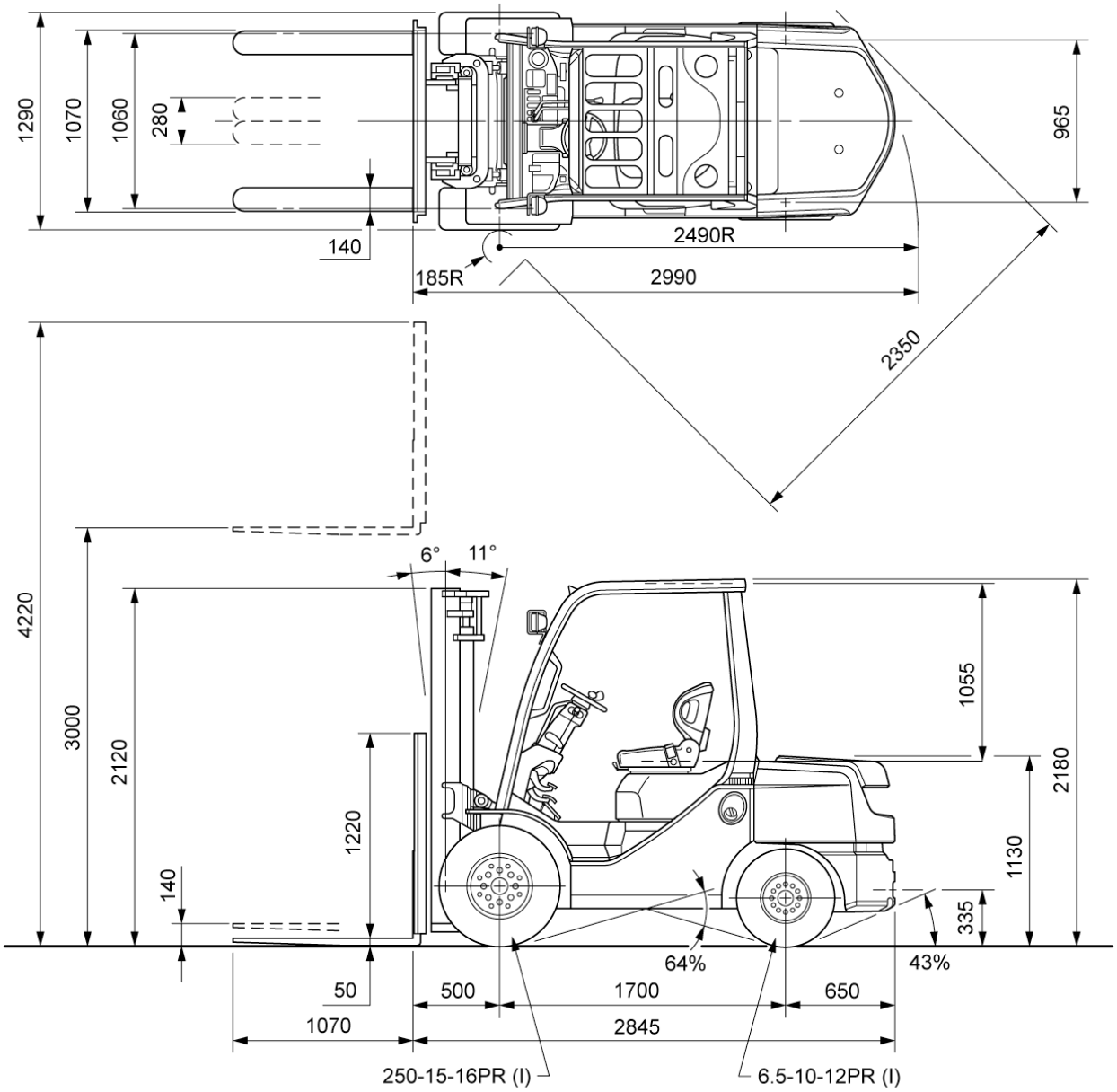

UNDERCLEARANCE

Mast (Full Load)---------- 130
Drive Axle (Full Load)---------- 140
Steer Axle (No Load)---------- 180
Center of Wheelbase (Full Load)--------- 190
Counterweight (No Load)---------- 170

SPECIAL TREAD

(February 2011)

Model		8FGJ/8FDJ35	
Front Tire	Single/Dual	Dual	Dual
Front Tire Size		6.00-15-10PR (I)	28x8-15-12PR (I)
Overall Width	mm	1525	1715
Tread, Front	mm	1155	1290

SPECIAL MAST

(January 2016)

Wide Visible Full-Free Lift Two-Stage Mast (FV), Wide Visible Full-Free Lift Three-Stage Mast (FSV)

Model				8FGJ35	62-8FDJ35 <36kW>	70-8FDJ35 72-8FDJ35 82-8FDJ35	8FGJ35	62-8FDJ35 <36kW>	70-8FDJ35 72-8FDJ35 82-8FDJ35
Type of Mast				FV			FSV		
PERFORMANCE									
Speeds	Lifting	Full Load	mm/sec	420	420<340>	450	400	400<355>	430
		No Load	mm/sec	460	460<360>	480	440	440<380>	460
	Lowering	Full Load	mm/sec	460			460		
		No Load	mm/sec	390			390		
DIMENSIONS									
Load Distance (Centerline of front axle to front face of forks)			mm	500			510		

RATED CAPACITIES

(April 2009)

8FGJ/8FDJ35

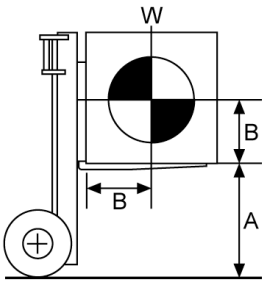

A: Max. Fork Height
B: Load Center
W: Capacity

V, FV Mast (PN)

Unit: kg (**W**)

A (mm)		4500	5000
B (mm)	500	3500	3300 [3400]
	600	3180	3000 [3090]
	700	2920	2750 [2840]
	800	2700	2550 [2620]
	900	2510	2370 [2440]
	1000	2340	2210 [2280]
	1100	2200	2070 [2140]
	1200	2070	1950 [2010]
	1300	1960	1840 [1900]

[ ] for dual tire models.

V, FV Mast (PSC)

Unit: kg (**W**)

A (mm)		4500	5000
B (mm)	500	3500	3400
	600	3180	3090
	700	2920	2840
	800	2700	2620
	900	2510	2440
	1000	2340	2280
	1100	2200	2140
	1200	2070	2010
	1300	1960	1900

FSV Mast (PN or PSC)

Unit: kg (**W**)

A (mm)		4300	4500	4700	5000	5500	6000	6500	7000
B (mm)	500	3500	3400	3400	3300	2700 [3200]	2000 [2400]	— [1650]	— [900]
	600	3190	3100	3100	3000	2460 [2910]	1820 [2180]	— [1500]	— [820]
	700	2930	2840	2840	2760	2260 [2680]	1670 [2010]	— [1380]	— [750]
	800	2710	2630	2630	2550	2090 [2480]	1550 [1860]	— [1270]	— [690]
	900	2520	2450	2450	2380	1940 [2300]	1440 [1730]	— [1190]	— [640]
	1000	2350	2290	2290	2220	1820 [2150]	1340 [1610]	— [1110]	— [600]
	1100	2210	2150	2150	2080	1700 [2020]	1260 [1510]	— [1040]	— [560]
	1200	2080	2020	2020	1960	1610 [1900]	1190 [1430]	— [980]	— [530]
	1300	1970	1910	1910	1860	1520 [1800]	1120 [1350]	— [930]	— [500]

[ ] for dual tire models.

MAST SPECIFICATIONS & RATED CAPACITIES

(April 2009)

Wide Visible Mast (V), Wide Visible Full-Free Lift Two-Stage Mast (FV), Wide Visible Full-Free Lift Three-Stage Mast (FSV)

8FGJ/8FDJ35

Mast Type	Maximum Fork Height	Overall Height			Free Lift		Single Tire				Dual Tire		
		Lowered	Extended		Without Load Backrest	With Standard Load Backrest	Tilt Range		Load Capacity at 500 mm LC		Tilt Range		Load Capacity at 500 mm LC
			Without Load Backrest	With Standard Load Backrest			FWD	BWD	Pneumatic Tire	Pneumatic-Shaped Cushion Tire	FWD	BWD	PneumaticTire/ Pneumatic-Shaped Cushion Tire
	mm	mm	mm	mm	mm	mm	deg	deg	kg	kg	deg	deg	kg
V	2700	2000	3570	3920	140	140	6	11	3500	3500	6	11	3500
	3000	2120	3870	4220	140	140	6	11	3500	3500	6	11	3500
	3300	2300	4170	4520	140	140	6	11	3500	3500	6	11	3500
	3500	2400	4370	4720	140	140	6	11	3500	3500	6	11	3500
	3700	2500	4570	4920	140	140	6	11	3500	3500	6	11	3500
	4000	2750	4870	5220	140	140	6	11	3500	3500	6	11	3500
	4500	3000	5370	5720	140	140	6	6	3500	3500	6	11	3500
	5000	3250	5870	6220	140	140	6	6	3300	3400	6	6	3400
FV	3000	2120	3735	4220	1395	910	6	11	3500	3500	6	11	3500
	3300	2300	4035	4520	1575	1090	6	11	3500	3500	6	11	3500
	3500	2400	4235	4720	1675	1190	6	11	3500	3500	6	11	3500
	3700	2500	4435	4920	1775	1290	6	11	3500	3500	6	11	3500
	4000	2750	4735	5220	2025	1540	6	11	3500	3500	6	11	3500
FSV	3700	2030	4435	4920	1305	820	6	6	3500	3500	6	6	3500
	4000	2180	4735	5220	1455	970	6	6	3500	3500	6	6	3500
	4300	2230	5035	5520	1505	1020	6	6	3500	3500	6	6	3500
	4500	2280	5235	5720	1555	1070	6	6	3400	3400	6	6	3400
	4700	2440	5435	5920	1715	1230	6	6	3400	3400	6	6	3400
	5000	2630	5735	6220	1905	1420	6	6	3300	3300	6	6	3300
	5500	2880	6235	6720	2155	1670	6	6	2700	2850	6	6	3200
	6000	3130	6735	7220	2405	1920	6	6	2000	2150	6	6	2400
	6500	3380	7235	7720	2655	2170	—	—	—	—	6	6	1650
	7000	3630	7735	8220	2905	2420	—	—	—	—	6	6	900

NOTE: Height of standard load backrest is 1220 mm.

8FG/8FD10.15.18.20.25.30 8FGK/8FDK20.25.30, 8FGJ/8FDJ35

OPTIONS AVAILABILITY CHART

(January 2016)

❍: Standard / ●: Available

Item			Code	Model																																						
				30-8FG10	32-8FG10	60-8FD10	62-8FD10	30-8FG15	32-8FG15	60-8FD15	62-8FD15	32-8FG18	62-8FD18	30-8FG20	32-8FG20	70-8FD20	72-8FD20	82-8FD20	60-8FD20	62-8FD20	30-8FG25	32-8FG25	70-8FD25	72-8FD25	82-8FD25	60-8FD25	62-8FD25	30-8FG30	32-8FG30	70-8FD30	72-8FD30	82-8FD30	60-8FD30	62-8FD30	30-8FGJ35	32-8FGJ35	70-8FDJ35	72-8FDJ35	82-8FDJ35	62-8FDJ35	32-8FGK20	62-8FDK20	32-8FGK25	62-8FDK25	32-8FGK30	62-8FDK30
LOAD HANDLING																																														
Full-free Lift 2-stage Mast (FV)	1)		M00F✳	●	●	●	●	●	●	●	●	●	●	●	●	●	●	●	●	●	●	●	●	●	●	●	●	●	●	●	●	●	●	●	●	●	●	●	●	●	●	●	●	●	●	●
Full-free Lift 3-stage Mast (FSV)	2)		M00D✳	●	●	●	●	●	●	●	●	●	●	●	●	●	●	●	●	●	●	●	●	●	●	●	●	●	●	●	●	●	●	●	●	●	●	●	●	●	●	●	●	●	●	●
Fully Oil Charged Lift Cylinder	3)	☆★	M09A	●	●	●	●	●	●	●	●	●	●	●	●	●	●	●	●	●	●	●	●	●	●	●	●	●	●	●	●	●	●	●	●	●	●	●	●	●	●	●	●	●	●	●
Long Forks		☆	M20A✳	●	●	●	●	●	●	●	●	●	●	●	●	●	●	●	●	●	●	●	●	●	●	●	●	●	●	●	●	●	●	●	●	●	●	●	●	●	●	●	●	●	●	●
w/o Fork Set		☆★	M20N	●	●	●	●	●	●	●	●	●	●	●	●	●	●	●	●	●	●	●	●	●	●	●	●	●	●	●	●	●	●	●	●	●	●	●	●	●	●	●	●	●	●	●
Fork Noise Reducer		★	M22B	●	●	●	●	●	●	●	●	●	●	●	●	●	●	●	●	●	●	●	●	●	●	●	●	●	●	●	●	●	●	●	●	●	●	●	●	●	●	●	●	●	●	●
Additional Forks			M29A✳	●	●	●	●	●	●	●	●	●	●	●	●	●	●	●	●	●	●	●	●	●	●	●	●	●	●	●	●	●	●	●	●	●	●	●	●	●	●	●	●	●	●	●
Long Forkbar		☆	M30A✳	●	●	●	●	●	●	●	●	●	●	●	●	●	●	●	●	●	●	●	●	●	●	●	●	●	●	●	●	●	●	●	●	●	●	●	●	●	●	●	●	●	●	●
Sleeved Forks			P10A✳	●	●	●	●	●	●	●	●	●	●	●	●	●	●	●	●	●	●	●	●	●	●	●	●	●	●	●	●	●	●	●	●	●	●	●	●	●	●	●	●	●	●	●
High Load Backrest (Flat Steel Type)		☆★	M33A	●	●	●	●	●	●	●	●	●	●	●	●	●	●	●	●	●	●	●	●	●	●	●	●	●	●	●	●	●	●	●	●	●	●	●	●	●	●	●	●	●	●	●
High Load Backrest (Angle Shape Type)		☆	M40A✳	●	●	●	●	●	●	●	●	●	●	●	●	●	●	●	●	●	●	●	●	●	●	●	●	●	●	●	●	●	●	●	●	●	●	●	●	●	●	●	●	●	●	●
w/o Backrest			M40N	●	●	●	●	●	●	●	●	●	●	●	●	●	●	●	●	●	●	●	●	●	●	●	●	●	●	●	●	●	●	●	●	●	●	●	●	●	●	●	●	●	●	●
High Load Backrest When Ordering FV Mast	4)		M41B	●	●	●	●	●	●	●	●	●	●	●	●	●	●	●	●	●	●	●	●	●	●	●	●	●	●	●	●	●	●	●	●	●	●	●	●	●	●	●	●	●	●	●
Fork Vibration Damper			M82A	●	●	●	●	●	●	●	●	●	●	●	●	●	●	●	●	●	●	●	●	●	●	●	●	●	●	●	●	●	●	●	●	●	●	●	●	●	●	●	●	●	●	●
Tilt Cylinder Hole Boots	5)	★	K35A	●	●	●	●	●	●	●	●	●	●	●	●	●	●	●	●	●	●	●	●	●	●	●	●	●	●	●	●	●	●	●	●	●	●	●	●	●	●	●	●	●	●	●
Travel and Load Handling Control	6)	★	K39A	●	●	●	●	●	●	●	●	●	●	●	●	●	●	●	●	●	●	●	●	●	●	●	●	●	●	●	●	●	●	●	●	●	●	●	●	●	●	●	●	●	●	●
Mast Tilt Indicator			N14A	●	●	●	●	●	●	●	●	●	●	●	●	●	●	●	●	●	●	●	●	●	●	●	●	●	●	●	●	●	●	●	●	●	●	●	●	●	●	●	●	●	●	●
ENGINE																																														
LPG Fuel System Exclusive Type (Z4)	7)	★	C00A	●	●			●	●			●		●	●						●	●						●	●						●	●					●		●		●	
LPG Fuel System Convertible Type (Z3)	8)	★	C00B	●	●			●	●			●		●	●						●	●						●	●						●	●					●		●		●	
LPG Fuel System (Australian Spec.) (Z3)	9)	★	C00D	●	●			●	●			●		●	●						●	●						●	●						●	●					●		●		●	
LPG Fuel System (New Zealand Spec.) (Z3)	9)	★	C00L	●	●			●	●			●		●	●						●	●						●	●						●	●					●		●		●	
LPG Cylinder 20 kg w/ Level Gauge	10)	★	C01D	●	●			●	●			●		●	●						●	●						●	●						●	●					●		●		●	
LPG Cylinder 15 kg w/ Level Gauge	10)	★	C01I	●	●			●	●			●		●	●						●	●						●	●						●	●					●		●		●	
w/o LPG Cylinder 20 kg	11)	★	C01N	●	●			●	●			●		●	●						●	●						●	●						●	●					●		●		●	
w/o LPG Cylinder 15 kg	11)	★	C01P	●	●			●	●			●		●	●						●	●						●	●						●	●					●		●		●	
w/o LPG Cylinder Bracket	12)	★	C03N	●	●			●	●			●		●	●						●	●						●	●						●	●					●		●		●	
LPG Fuel System (Russian Spec.)	13)	★	C04C						●			●			●							●							●							●					●		●		●	
LPG Amine Proof Spec.	51)	★	C04E	●	●			●	●			●		●	●						●	●						●	●						●	●					●		●		●	
LPG Cylinder, Spare	14)		C05A	●	●			●	●			●		●	●						●	●						●	●						●	●					●		●		●	
Cabin Modification for LPG Bracket	15)	★	C06B											●	●						●	●						●	●						●	●										
Upswept Exhaust		★	C10A	●	●	●	●	●	●	●	●	●	●	●	●	●	●	●	●	●	●	●	●	●	●	●	●	●	●	●	●	●	●	●	●	●	●	●	●	●						
Catalytic Muffler		★	C11A	●	●	●	●	●	●	●	●	●	●	●	●	●	●	●	●	●	●	●	●	●	●	●	●	●	●	●	●	●	●	●	●	●	●	●	●	●	●	●	●	●	●	●
3-way Catalytic Converter System	16)	★	C11D	●	●			●	●			●		●	●						●	●						●	●						●	●					●		●		●	
Spark Guard Net		★	C12A	●	●	●	●	●	●	●	●	●	●	●	●	●	●	●	●	●	●	●	●	●	●	●	●	●	●	●	●	●	●	●	●	●	●	●	●	●	●	●	●	●	●	●
LPG Fuel System w/ Drain-equipped Regulator	17)		C14A	●	●			●	●			●		●	●						●	●						●	●						●	●					●		●		●	
Cyclone Air Cleaner (Dual Elements)			C15B	●	●	●	●	●	●	●	●	●	●	●	●	●	●	●	●	●	●	●	●	●	●	●	●	●	●	●	●	●	●	●	●	●	●	●	●	●	●	●	●	●	●	●
Pre-cleaner		★	C16A	●	●	●	●	●	●	●	●	●	●	●	●	●	●	●	●	●	●	●	●	●	●	●	●	●	●	●	●	●	●	●	●	●	●	●	●	●	●	●	●	●	●	●
Long Life Coolant 50%			C19B	●	●	●	●	●	●	●	●	●	●	●	●	●	●	●	●	●	●	●	●	●	●	●	●	●	●	●	●	●	●	●	●	●	●	●	●	●	●	●	●	●	●	●
LPG Connector Valve	18)	★	C20O	●	●			●	●			●		●	●						●	●						●	●						●	●					●		●		●	
Diesel Particulate Filter-II	19)	★	C21A			●	●			●	●		●			●	●		●	●			●	●		●	●			●	●		●	●			●	●		●		●		●		●
w/o DPF AC Cable	20)	★	C22B			●	●			●	●		●			●	●		●	●			●	●		●	●			●	●		●	●			●	●		●		●		●		●
Beijing Emission Certified Disel Engine	55)	★	C25C				●				●		●							●							●							●						●						
LPG Remaining Fuel Warning Device	21)	★	C28A	●	●			●	●			●		●	●						●	●						●	●						●	●					●		●		●	
1DZ-III (Low-emission Diesel Engine)		★	C31A				●				●		●							●							●							●						●						
High-capacity Alternator		★	D05A	●	●	●	●	●	●	●	●	●	●	●	●	●	●		●	●	●	●	●	●		●	●	●	●	●	●		●	●	●	●	●	●		●	●	●	●	●	●	●
High-capacity Battery		★	D20A	●	●	●	●	●	●	●	●	●	●	●	●	●	●	●	●	●	●	●	●	●	●	●	●	●	●	●	●	●	●	●	●	●	●	●	●	●	●	●	●	●	●	●
w/o Intake Heater		★	D24N													●	●						●	●						●	●						●	●								
Key-less Ignition Switch		★	D29A	●	●	●	●	●	●	●	●	●	●	●	●	●	●	●	●	●	●	●	●	●	●	●	●	●	●	●	●	●	●	●	●	●	●	●	●	●	●	●	●	●	●	●
Left Hand Shift Lever	22)	★	E11A		●		●		●		●	●	●		●		●	●		●		●		●	●		●		●		●	●		●		●		●	●	●	●	●	●	●	●	●
Right Hand Shift Lever	23)	★	E11B		●		●		●		●	●	●		●		●	●		●		●		●	●		●		●		●	●		●		●		●	●	●	●	●	●	●	●	●
Anti-restart Ignition Key Switch		★	E26A	●	●	●	●	●	●	●	●	●	●	●	●	●	●	●	●	●	●	●	●	●	●	●	●	●	●	●	●	●	●	●	●	●	●	●	●	●	●	●	●	●	●	●
LIGHT AND INDICATORS																																														
Yellow Strobe Light on OHG (Key ON Position)		★	J19I	●	●	●	●	●	●	●	●	●	●	●	●	●	●	●	●	●	●	●	●	●	●	●	●	●	●	●	●	●	●	●	●	●	●	●	●	●	●	●	●	●	●	●
Yellow Strobe Light on OHG (Reverse Position)		★	J19S	●	●	●	●	●	●	●	●	●	●	●	●	●	●	●	●	●	●	●	●	●	●	●	●	●	●	●	●	●	●	●	●	●	●	●	●	●	●	●	●	●	●	●
Front Combination Lights	54)	★	J20B	●	●	●	●	●	●	●	●	●	●	●	●	●	●	●	●	●	●	●	●	●	●	●	●	●	●	●	●	●	●	●	●	●	●	●	●	●	●	●	●	●	●	●
Rear Combination Lights			J21A	●	●	●	●	●	●	●	●	●	●	●	●	●	●	●	●	●	●	●	●	●	●	●	●	●	●	●	●	●	●	●	●	●	●	●	●	●	●	●	●	●	●	●
Inside-set Headlights	24)	★	J04H											●	●	●	●	●	●	●	●	●	●	●	●	●	●	●	●	●	●	●	●	●	●	●	●	●	●	●	●	●	●	●	●	●
Headlights w/ Front Combination Lights			J24K	●	●	●	●	●	●	●	●	●	●	●	●	●	●	●	●	●	●	●	●	●	●	●	●	●	●	●	●	●	●	●	●	●	●	●	●	●	●	●	●	●	●	●
LED Headlights		★	J24L	●	●	●	●	●	●	●	●	●	●	●	●	●	●	●	●	●	●	●	●	●	●	●	●	●	●	●	●	●	●	●	●	●	●	●	●	●	●	●	●	●	●	●
Rear Working Light (Selective Lighting Condition)		★	J26C	●	●	●	●	●	●	●	●	●	●	●	●	●	●	●	●	●	●	●	●	●	●	●	●	●	●	●	●	●	●	●	●	●	●	●	●	●	●	●	●	●	●	●
Two Rear Working Lights (Selective Lighting Condition)		★	J26D	●	●	●	●	●	●	●	●	●	●	●	●	●	●	●	●	●	●	●	●	●	●	●	●	●	●	●	●	●	●	●	●	●	●	●	●	●	●	●	●	●	●	●
LED Rear Working Light (Selective Lighting Condition)		★	J26I	●	●	●	●	●	●	●	●	●	●	●	●	●	●	●	●	●	●	●	●	●	●	●	●	●	●	●	●	●	●	●	●	●	●	●	●	●	●	●	●	●	●	●
LED Two Rear Working Lights (Selective Lighting Condition)		★	J26J	●	●	●	●	●	●	●	●	●	●	●	●	●	●	●	●	●	●	●	●	●	●	●	●	●	●	●	●	●	●	●	●	●	●	●	●	●	●	●	●	●	●	●
Rear Combination Lights Guard			K01B	●	●	●	●	●	●	●	●	●	●	●	●	●	●	●	●	●	●	●	●	●	●	●	●	●	●	●	●	●	●	●	●	●	●	●	●	●	●	●	●	●	●	●
Radiator Screen		★	K19A	●	●	●	●	●	●	●	●	●	●	●	●	●	●	●	●	●	●	●	●	●	●	●	●	●	●	●	●	●	●	●	●	●	●	●	●	●	●	●	●	●	●	●

Item			Code	Model																																						
				30-8FG10	32-8FG10	60-8FD10	62-8FD10	30-8FG15	32-8FG15	60-8FD15	62-8FD15	32-8FG18	62-8FD18	30-8FG20	32-8FG20	70-8FD20	72-8FD20	82-8FD20	60-8FD20	62-8FD20	30-8FG25	32-8FG25	70-8FD25	72-8FD25	82-8FD25	60-8FD25	62-8FD25	30-8FG30	32-8FG30	70-8FD30	72-8FD30	82-8FD30	60-8FD30	62-8FD30	30-8FGJ35	32-8FGJ35	70-8FDJ35	72-8FDJ35	82-8FDJ35	62-8FDJ35	32-8FGK20	62-8FDK20	32-8FGK25	62-8FDK25	32-8FGK30	62-8FDK30
Back-up Buzzer		★	K21D	●	●	●	●	●	●	●	●	●	●	●	●	●	●	●	●	●	●	●	●	●	●	●	●	●	●	●	●	●	●	●	●	●	●	●	●	●	●	●	●	●	●	●
Back-up Buzzer With On-off Switch		★	K21K	●	●	●	●	●	●	●	●	●	●	●	●	●	●	●	●	●	●	●	●	●	●	●	●	●	●	●	●	●	●	●	●	●	●	●	●	●	●	●	●	●	●	●
OK Monitor	16)		L09A	●	●	●	●	●	●	●	●	●	●	●	●	●	●	●	●	●	●	●	●	●	●	●	●	●	●	●	●	●	●	●	●	●	●	●	●	●	●	●	●	●	●	●
Speedometer		★	L10A		●		●		●		●	●	●		●		●	●		●		●		●	●		●		●		●	●	●	●		●		●	●	●						
Multifunction Display	25)	★	L26A	●	●	●	●	●	●	●	●	●	●	●	●	●	●	●	●	●	●	●	●	●	●	●	●	●	●	●	●	●	●	●	●	●	●	●	●	●	●	●	●	●	●	●
Deluxe Multifunction Display	25)	★	L26B	●	●	●	●	●	●	●	●	●	●	●	●	●	●	●	●	●	●	●	●	●	●	●	●	●	●	●	●	●	●	●	●	●	●	●	●	●	●	●	●	●	●	●
w/o Oil Pressure Indicator	26)		Q15N	●	●	●	●	●	●	●	●	●	●	●	●	●	●	●	●	●	●	●	●	●	●	●	●	●	●	●	●	●	●	●	●	●	●	●	●	●	●	●	●	●	●	●
Yellow Strobe Light Wiring (Key ON Position)		★	S19A	●	●	●	●	●	●	●	●	●	●	●	●	●	●	●	●	●	●	●	●	●	●	●	●	●	●	●	●	●	●	●	●	●	●	●	●	●	●	●	●	●	●	●
Yellow Strobe Light Wiring (Reverse Position)		★	S19B	●	●	●	●	●	●	●	●	●	●	●	●	●	●	●	●	●	●	●	●	●	●	●	●	●	●	●	●	●	●	●	●	●	●	●	●	●	●	●	●	●	●	●
BODY																																														
Vehicle-hoisting Hook	27)		G16A	●	●	●	●	●	●	●	●	●	●	●	●	●	●	●	●	●	●	●	●	●	●	●	●	●	●	●	●	●	●	●	●	●	●	●	●	●	●	●	●	●	●	●
Suspension Seat w/ Damper		★	G40E	●	●	●	●	●	●	●	●	●	●	●	●	●	●	●	●	●	●	●	●	●	●	●	●	●	●	●	●	●	●	●	●	●	●	●	●	●	●	●	●	●	●	●
Swivel Seat		★	G41F	●	●	●	●	●	●	●	●	●	●	●	●	●	●	●	●	●	●	●	●	●	●	●	●	●	●	●	●	●	●	●	●	●	●	●	●	●	●	●	●	●	●	●
Floor Mat		★	G80A	●	●	●	●	●	●	●	●	●	●	●	●	●	●	●	●	●	●	●	●	●	●	●	●	●	●	●	●	●	●	●	●	●	●	●	●	●	●	●	●	●	●	●
Urethane Floor Mat		★	G80B	●	●	●	●	●	●	●	●	●	●	●	●	●	●	●	●	●	●	●	●	●	●	●	●	●	●	●	●	●	●	●	●	●	●	●	●	●	●	●	●	●	●	●
Deluxe Cabin	28)	★	H00X											●	●	●	●	●	●	●	●	●	●	●	●	●	●	●	●	●	●	●	●	●	●	●	●	●	●	●						
w/o Overhead Guard Sheet	29)	★	H01N	●	●	●	●	●	●	●	●	●	●	●	●	●	●	●	●	●	●	●	●	●	●	●	●	●	●	●	●	●	●	●	●	●	●	●	●	●	●	●	●	●	●	●
Canvas Cabin w/ Wiper and Washer	30)	★	H02C	●	●	●	●	●	●	●	●	●	●	●	●	●	●	●	●	●	●	●	●	●	●	●	●	●	●	●	●	●	●	●	●	●	●	●	●	●	●	●	●	●	●	●
Front Windshield w/ Wiper and Washer		★	H02D	●	●	●	●	●	●	●	●	●	●	●	●	●	●	●	●	●	●	●	●	●	●	●	●	●	●	●	●	●	●	●	●	●	●	●	●	●	●	●	●	●	●	●
Heater	31)	★	H11A	●	●	●	●	●	●	●	●	●	●	●	●	●	●	●	●	●	●	●	●	●	●	●	●	●	●	●	●	●	●	●	●	●	●	●	●	●	●	●	●	●	●	●
Heater w/ Defroster	32)	★	H12A	●	●	●	●	●	●	●	●	●	●	●	●	●	●	●	●	●	●	●	●	●	●	●	●	●	●	●	●	●	●	●	●	●	●	●	●	●	●	●	●	●	●	●
Cabin w/ Folding Door	33)	★	H34A	●	●	●	●	●	●	●	●	●	●	●	●	●	●	●	●	●	●	●	●	●	●	●	●	●	●	●	●	●	●	●	●	●	●	●	●	●	●	●	●	●	●	●
Fuel Tank Cap w/ Key		★	C09A	●	●	●	●	●	●	●	●	●	●	●	●	●	●	●	●	●	●	●	●	●	●	●	●	●	●	●	●	●	●	●	●	●	●	●	●	●	●	●	●	●	●	●
Mini Lever	34)	★	E45A		●		●		●		●	●	●		●		●	●		●		●		●	●		●		●		●	●		●		●		●	●	●	●	●	●	●	●	●
Joystick	34)	★	E45B		●		●		●		●	●	●		●		●	●		●		●		●	●		●		●		●	●		●		●		●	●	●	●	●	●	●	●	●
Rear-view Mirror, Right and Left Sides			J10B	●	●	●	●	●	●	●	●	●	●	●	●	●	●	●	●	●	●	●	●	●	●	●	●	●	●	●	●	●	●	●	●	●	●	●	●	●	●	●	●	●	●	●
Rear-pillar Assist Grip			L37A	●	●	●	●	●	●	●	●	●	●	●	●	●	●	●	●	●	●	●	●	●	●	●	●	●	●	●	●	●	●	●	●	●	●	●	●	●	●	●	●	●	●	●
Body Color (431 Orange)			R00R	●	●	●	●	●	●	●	●	●	●	●	●	●	●	●	●	●	●	●	●	●	●	●	●	●	●	●	●	●	●	●	●	●	●	●	●	●	●	●	●	●	●	●
Tool, Standard Set (A Set)			S00B	●	●	●	●	●	●	●	●	●	●	●	●	●	●	●	●	●	●	●	●	●	●	●	●	●	●	●	●	●	●	●	●	●	●	●	●	●	●	●	●	●	●	●
Tool, Standard Set (B Set)			S00C	●	●	●	●	●	●	●	●	●	●	●	●	●	●	●	●	●	●	●	●	●	●	●	●	●	●	●	●	●	●	●	●	●	●	●	●	●	●	●	●	●	●	●
Document Box	35)	★	S04A	●	●	●	●	●	●	●	●	●	●	●	●	●	●	●	●	●	●	●	●	●	●	●	●	●	●	●	●	●	●	●	●	●	●	●	●	●	●	●	●	●	●	●
Name Plate Full-stamped			S30A	●	●	●	●	●	●	●	●	●	●	●	●	●	●	●	●	●	●	●	●	●	●	●	●	●	●	●	●	●	●	●	●	●	●	●	●	●	●	●	●	●	●	●
Name Plate (English)			S31A	●	●	●	●	●	●	●	●	●	●	●	●	●	●	●	●	●	●	●	●	●	●	●	●	●	●	●	●	●	●	●	●	●	●	●	●	●	●	●	●	●	●	●
Name Plate (Spanish)			S31B	●	●	●	●	●	●	●	●	●	●	●	●	●	●	●	●	●	●	●	●	●	●	●	●	●	●	●	●	●	●	●	●	●	●	●	●	●						
Name Plate (Chinese)			S31C	●	●	●	●	●	●	●	●	●	●	●	●	●	●	●	●	●	●	●	●	●	●	●	●	●	●	●	●	●	●	●	●	●	●	●	●	●						
Name Plate (French)			S31E	●	●	●	●	●	●	●	●	●	●	●	●	●	●	●	●	●	●	●	●	●	●	●	●	●	●	●	●	●	●	●	●	●	●	●	●	●						
Name Plate (Russian)			S31F	●	●	●	●	●	●	●	●	●	●	●	●	●	●	●	●	●	●	●	●	●	●	●	●	●	●	●	●	●	●	●	●	●	●	●	●	●						
Name Plate (Taiwanese)			S31G	●	●	●	●	●	●	●	●	●	●	●	●	●	●	●	●	●	●	●	●	●	●	●	●	●	●	●	●	●	●	●	●	●	●	●	●	●						
Name Plate (Portuguese)			S31K	●	●	●	●	●	●	●	●	●	●	●	●	●	●	●	●	●	●	●	●	●	●	●	●	●	●	●	●	●	●	●	●	●	●	●	●	●						
OPS Decal			S35A	●	●	●	●	●	●	●	●	●	●	●	●	●	●	●	●	●	●	●	●	●	●	●	●	●	●	●	●	●	●	●	●	●	●	●	●	●	●	●	●	●	●	●
CHASSIS																																														
Oil Clutch (Manual Transmission)		★	E01A	●		●		●		●				●		●			●		●		●			●		●		●			●		●		●									
2-stator T/C		★	E10G												●		●	●		●		●		●	●		●		●		●	●		●		●		●	●	●						
Hand Parking Brake	36)	★	E33A		●		●		●		●	●	●		●		●	●		●		●		●	●		●		●		●	●		●		●		●	●	●	●	●	●	●	●	●
LSD (Limited-Slip Differential)			E54A											●	●	●	●	●	●	●	●	●	●	●	●	●	●																			
WHEELS AND TIRES																																														
Pneumatic Tire		☆		●	●	●	●	●	●	●	●	●	●	●	●	●	●	●	●	●	●	●	●	●	●	●	●	●	●	●	●	●	●	●	●	●	●	●	●	●	●	●	●	●	●	●
Pneumatic-shaped Cushion Tire		☆		●	●	●	●	●	●	●	●	●	●	●	●	●	●	●	●	●	●	●	●	●	●	●	●	●	●	●	●	●	●	●	●	●	●	●	●	●	●	●	●	●	●	●
SPECIAL MODEL																																														
E.E.C. Spec. (Machinery Directive)	37)	★	A10B								●		●							●							●							●						●						
China Certification Spec.	52)	★	A10R		●		●		●		●	●	●		●		●			●		●		●			●		●		●			●		●		●								
E Mark (for EC)	38)		A13A								●		●							●							●							●						●						
Australian Spec.	39)	★	A20B	●	●	●	●	●	●	●	●	●	●	●	●	●	●		●	●	●	●	●	●		●	●	●	●	●	●		●	●	●	●	●	●		●	●	●	●	●	●	●
Russian Spec.	40)	★	A20C			●	●			●	●		●						●	●						●	●						●	●						●						
Russian Low Profile Spec.	41)	★	A20L			●	●			●	●		●																											●						
High Capacity Cooling Spec.	42)	★	A26A			●	●	●	●	●	●	●	●	●	●	●	●	●	●	●	●	●	●	●	●	●	●	●	●	●	●	●	●	●	●	●	●	●	●	●	●	●	●	●	●	●
Korean Spec.	43)	★	A20S				●				●		●					●		●					●		●					●		●					●	●						
System of Active Stability	50)	★	A41A	●	●	●	●	●	●	●	●	●	●	●	●	●	●	●	●	●	●	●	●	●	●	●	●	●	●	●	●	●	●	●	●	●	●	●	●	●	❍	❍	❍	❍	❍	❍
High Capacity Cooling Spec. (Paper Industry Spec.)	42)	★	A60B			●	●	●	●	●	●	●	●	●	●	●	●	●	●	●	●	●	●	●	●	●	●	●	●	●	●	●	●	●	●	●	●	●	●	●	●	●	●	●	●	●
Unit Indication, mm/kg	44)		A95B	❍	❍	❍	❍	❍	❍	❍	❍	❍	❍	❍	❍	❍	❍	❍	❍	❍	❍	❍	❍	❍	❍	❍	❍	❍	❍	❍	❍	❍	❍	❍	❍	❍	❍	❍	❍	❍	❍	❍	❍	❍	❍	❍
Cold Area Package	45)	★	B01A													●	●	●					●	●	●					●	●	●					●	●	●							
Low-noise Model	46)	★	B11A	●	●	●	●	●	●	●	●	●	●	●	●	●	●	●	●	●	●	●	●	●	●	●	●	●	●	●	●	●	●	●	●	●	●	●	●	●	●	●	●	●	●	●
Rust-proof Model	47)	★	B30H	●	●	●	●	●	●	●	●	●	●	●	●	●	●	●	●	●	●	●	●	●	●	●	●	●	●	●	●	●	●	●	●	●	●	●	●	●	●	●	●	●	●	●
Rust-proof Model (Fisherman Special)	48)	★	B30J	●	●	●	●	●	●	●	●	●	●	●	●	●	●	●	●	●	●	●	●	●	●	●	●	●	●	●	●	●	●	●	●	●	●	●	●	●	●	●	●	●	●	●
Rust-proof Parts (Nuts and Bolts)		★	B31B	●	●	●	●	●	●	●	●	●	●	●	●	●	●	●	●	●	●	●	●	●	●	●	●	●	●	●	●	●	●	●	●	●	●	●	●	●	●	●	●	●	●	●
Mast Rust-proof Painting	49)	★	R50A	●	●	●	●	●	●	●	●	●	●	●	●	●	●	●	●	●	●	●	●	●	●	●	●	●	●	●	●	●	●	●	●	●	●	●	●	●	●	●	●	●	●	●
Backrest Rust-proof Painting	49)	★	R51A	●	●	●	●	●	●	●	●	●	●	●	●	●	●	●	●	●	●	●	●	●	●	●	●	●	●	●	●	●	●	●	●	●	●	●	●	●	●	●	●	●	●	●

NOTE:

1) Must specify A20L for 2870 mm mast. Includes M09A (Not necessary to specify).
2) 6500 mm and 7000 mm mast is only available for dual tire models (F00C, F00D).
3) Not necessary to specify when selecting B30H, B30J and M00F.
4) Must specify M41B when backrest is required when selecting FV mast.
5) Cannot be combined with B11A (2Z engine models only), H00X, H02C, H34A.

6) Must enter together with A41A, C11D (Gasoline engine only), L26B.
   Includes D05A for Diesel engine models (Not necessary to specify).
7) Must enter together with one of C01D, I, N, P. Must specify C20O.
8) Must enter together with one of C01D, I, N, P.
9) 1 ton series: 15 kg cylinder, 2-3 ton series: 20 kg cylinder.
10) Must enter together with C00A or C00B. Must specify C20O. Must specify C06B when select H34A, H02C,H00X.
11) Must enter together with C00A or C00B. Must specify C06B when select H34A, H02C, H00X.
12) Must enter together with C00A or C00B and either C01N or C01P.
13) Must enter together with C00B, C01N. Must Specify C20O.

14) The vehicle-mounted cylinder is a spare cylinder.
15) Must enter together with H34A or H02C or H00X. Must enter together with C00A or C00B.
16) Must enter together with A41A.
17) Must enter together with C00A or C00B. Must specify C06B when select H34A, H02C, H00X.
    Cannot be combined with C00D or C04C or C11D (Already installed).
18) Must enter together with C00A or C00B.
19) Includes D05A. (Not necessary to specify) 1DZ model Includes D20A (Not necessary to specify).
20) Must specify C21A.
21) Cannot be combined with A460, A461, A465, A466.
22) Must enter together with E45A or E45B.
23) Must specify A41A, C11D (Gasoline engine only).

24) Available for 4300 to 4700 mm FSV mast
    (Except 2.0 and 2.5 ton 4300 mm mast model).
25) Must enter together with A41A.
26) Must enter together with one of A451, A461, A466, A401, A406.
27) Cannot be combined with F00C, F00D.
28) Must specify J24K, J10B.
29) Cannot be combined with H00X, H34A, H02C, H02D.
30) Includes H02D (Not necessary to specify). Must specify C06B when select C01D-C01P.
31) Includes D05A for Diesel engine models (Not necessary to specify).
32) Must enter one of (H34A, H00X, H02C,H02I) together with H11A.
33) Includes H02D (Not necessary to specify). Must specify C06B when select C01D-C01P.
34) Must enter together with A41A, C11D, L26A/B. Includes S04A (Not necessary to specify). When combined with G41F, S04A is not installed.
    Cannot be combined with A460, A461, A465, A466.
35) Cannot be combined with G41F.

36) Cannot be combined with A10B.
37) Must specify S31A. Must specify A13A for Israel.
38) Must specify A10B, C31A.
39) Includes M33A (Not necessary to specify).
40) Includes D20A (Not necessary to specify).
41) Cannot be combined with A4 piping. Includes D20A (Not necessary to specify).
42) Must enter together with E01A (Manual transmission models only).
    Under cover is equipped as standard.
43) Must specify S31A. Must specify C31A for (62-) models.
44) Must specify A95B.
45) Includes D20A and D05A (Not necessary to specify).
46) Only 2Z engine models includes [K35A] (Not necessary to specify).
    Under cover is equipped as standard.
47) Includes M09A (Not necessary to specify). Cannot be combined with A4 piping.
48) Includes M09A (Not necessary to specify). Cannot be combined with A4 piping. Must specify K35A.
49) Not available with Mast, B/R & ATT Specified Color [R40A].
50) Under cover is equipped as standard.
51) Must specify C04E for Malaysia.
52) Must specify J20B or J24K & K21D or K21K.
    Must specify J21A & S31C.
    62-model: Must specify C31A & C25C
54) Must specify J24L.

55) Must specify A10R & C31A.

★ Please see the “Matching Options”.
☆ Please see the chart below for the item.

STANDARD EQUIPMENT *(January 2013)*

8FG10.15.18.20.25.30, 8FGK20.25.30, 8FGJ35

●Wide Visible Mast (V) [MFH: 3000 mm] ● Load backrest (V and FSV masts) [Height: 1220 mm] ● Easy-down system (V mast) ● Alternator with IC regulator ● Same key for multiple forklifts ● 7" cyclone air cleaner with snorkel air intake ● Radiator reservoir tank ● Operator Presence Sensing System (OPS) ● Dual-action parking brake [Manual transmission models] ● Foot-activated parking brake [Powershift transmission models] ● Assist grip ● Neutral safety switch ● Electronic shift control ● Full hydraulic power steering ● Overhead guard sheet ● Overhead guard ● Rain gutter ● Hidden tilt cylinder ● Tilt cylinder boots ● Tilt steering column ● Engine hood damper (lockable) ● Jack point ● Drawbar pin ● Engine hood insulation ● Headlights ● Headlights guard ● Integrated light & Turn signal switch ● Hour Meter ● Engine water temperature indicator ● All-time fuel meter ● Engine oil pressure warning light ● Charge warning light ● Electric horn ● Storage area

8FD10.15.18.20.25.30, 8FDK20.25.30, 8FDJ35

● Wide Visible Mast (V) [MFH: 3000 mm] ● Load backrest (V and FSV masts) [Height: 1220 mm] ● Easy-down system (V mast) ● Alternator with IC regulator ● Intake heater (2Z engine models) ● Super glow control system (1DZ-II/1DZ-III engine models) ● Sedimenter ● Same key for multiple forklifts ● 7" cyclone air cleaner with snorkel air intake ● Radiator reservoir tank ● Operator Presence Sensing System (OPS) ● Dual-action parking brake [Manual transmission models] ● Foot-activated parking brake [Powershift transmission models] ● Assist grip ● Neutral safety switch ● Electronic shift control ● Full hydraulic power steering ● Overhead guard sheet ● Overhead guard ● Rain gutter ● Hidden tilt cylinder ● Tilt cylinder boots ● Tilt steering column ● Engine hood damper (lockable) ● Jack point ● Drawbar pin ● Engine hood insulation ● Headlights ● Headlights guard ● Integrated light & Turn signal switch ● Hour Meter ● Engine water temperature indicator ● All-time fuel meter ● Engine oil pressure warning light ● Charge warning light ● Pre-heat indicator light ● Sedimenter warning light ● Electric horn ● Storage area

FULLY OIL CHARGED LIFT CYLINDER *(January 2013)*

Model	Mast Type	
8FG/8FD10.15.18.20.25.30 8FGK/8FDK20.25.30 8FGJ/8FDJ35	V	●
	FV	❍
	FSV	●

INDEX: ❍ Standard / ● Available

MAST INTERCHANGEABILITY *(January 2013)*

Model		Mast Type																	
		8FG/8FD10						8FG/8FD15						8FG/8FD18					
		V		FSV		FV		V		FSV		FV		V		FSV		FV	
		2 Way C/V	A4 Piping	2 Way C/V	A4 Piping	2 Way C/V	A4 Piping	2 Way C/V	A4 Piping	2 Way C/V	A4 Piping	2 Way C/V	A4 Piping	2 Way C/V	A4 Piping	2 Way C/V	A4 Piping	2 Way C/V	A4 Piping
8FG/8FD10	2 Way C/V	●	●	●	●	●	●	●	●	●	●	●	●	●	●	●	●	●	●
	A4 Piping		●		●		●		●		●	●	●		●		●	●	●
8FG/8FD15	2 Way C/V	●	●	●	●	●	●	●	●	●	●	●	●	●	●	●	●	●	●
	A4 Piping		●		●		●		●		●	●	●		●		●	●	●
8FG/8FD18	2 Way C/V		●	●	●	●	●		●	●	●	●	●	●	●	●	●	●	●
	A4 Piping		●		●		●		●		●	●	●		●		●	●	●

INDEX: ● Available

Model		Mast Type					
		8FGK/8FDK20.25					
		V		FSV		FV	
		2 Way C/V	A4 Piping	2 Way C/V	A4 Piping	2 Way C/V	A4 Piping
8FGK/8FDK 20.25	2 Way C/V	●	●	●	●	●	●
	A4 Piping		●		●		●

INDEX: ● Available

Model		Mast Type					
		8FGK/8FDK30					
		V		FSV		FV	
		2 Way C/V	A4 Piping	2 Way C/V	A4 Piping	2 Way C/V	A4 Piping
8FGK/8FDK30	2 Way C/V	●	●	●	●	●	●
	A4 Piping		●		●	●	●

INDEX: ● Available

Model		Mast Type					
		8FG/8FD20.25					
		V		FSV		FV	
		2 Way C/V	A4 Piping	2 Way C/V	A4 Piping	2 Way C/V	A4 Piping
8FG/8FD20.25	2 Way C/V	●	●	●	●	●	●
	A4 Piping		●		●		●

INDEX: ● Available

Model		Mast Type					
		8FG/8FD30					
		V		FSV		FV	
		2 Way C/V	A4 Piping	2 Way C/V	A4 Piping	2 Way C/V	A4 Piping
8FG/8FD30	2 Way C/V	●	●	●	●	●	●
	A4 Piping		●		●	●	●

INDEX: ● Available

Model		Mast Type			
		8FG/8FD30			
		V		FSV	FV
8FGJ/8FDJ35	2 Way C/V	●		●	●
	A4 Piping	●		●	●

INDEX: ● Available
NOTE: ● Mast may be interchanged with models within the same group.

<**Important Notice**>
Mast is incompatible with model before Aug. '09 production and after Aug. '09 production.

MAST WEIGHT

(April 2009)

Mast Type	Maximum Fork Height	Model				
		8FG/8FD10.15.18	8FGK/8FDK20.25	8FG/8FD20.25	8FGK/8FDK30 8FG/8FD30	8FGJ/8FDJ35
	mm	kg	kg	kg	kg	kg
V	3000	370	440	440	550	640
	2700	350	420	460	530	620
	3300	400	460	510	580	670
	3500	410	480	520	600	700
	3700	430	500	550	620	720
	4000	480	550	600	680	790
	4500	540	600	660	740	860
	5000	570	640	700	780	900
FV	3000	400	450	500	560	670
	3300	420	470	520	580	700
	3500	430	490	540	600	740
	3700	450	510	560	620	760
	4000	500	550	610	680	830
FSV	3700	500	590	650	740	850
	4000	520	610	670	770	880
	4300	540	630	690	810	900
	4500	560	640	710	820	910
	4700	570	650	730	830	950
	5000	590	670	750	870	1060
	5500	630	710	790	960	1120
	6000	700	790	870	1020	1190
	6500	750	—	920	1080	1260
	7000	800	—	980	1140	1330

CAUTION:
The figures are without load backrest and forks.
The figures presented in this chart have been rounded off to the nearest number.
Use caution when applying them to specific products.

LONG FORKS

(April 2009)

Unit: mm

Model	Length	Width	Thickness	Long Forks
8FG/8FD10	770	100	30	●
	920			●
	1070			❍
	1220		35	●
	1370			●
	1520			●
8FG/8FD15.18	850	100	35	●
	920			●
	1070			❍
	1220			●
	1370			●
	1520			●
8FGK/8FDK20 8FG/8FD20	920	120	38	●
	1070			❍
	1220			●
	1370			●
	1520			●
	1670		42	●
	1820			●
8FGK/8FDK25 8FG/8FD25	920	120	42	●
	1070			❍
	1220			●
	1370			●
	1520			●
	1670			●
	1820			●
8FGK/8FDK30 8FG/8FD30	920	120	45	●
	1070			❍
	1220			●
	1370			●
	1520			●
	1670			●
	1820			●
	1970			●
8FGJ/8FDJ35	920	140	50	●
	1070			❍
	1220			●
	1370			●
	1520			●
	1670			●

INDEX: ❍ Standard / ● Available

SLEEVED FORKS

(April 2009)

Unit: mm

Model	Length	Sleeved Fork Length				
		1220	1370	1520	1670	1820
8FG/8FD10	770					
	920					
	1070	●	●	●		
	1220		●	●	●	●
	1370			●	●	●
	1520					
8FG/8FD15.18	850					
	920					
	1070	●	●	●		
	1220		●	●	●	●
	1370			●	●	●
	1520					
8FGK/8FDK20 8FG/8FD20	920					
	1070	●	●	●		
	1220		●	●	●	●
	1370			●	●	●
	1520					
	1670					
	1820					
8FGK/8FDK25 8FG/8FD25	920					
	1070	●	●	●		
	1220		●	●	●	●
	1370			●	●	●
	1520					
	1670					
	1820					

Model	Length	Sleeved Fork Length				
		1220	1370	1520	1670	1820
8FGK/8FDK30 8FG/8FD30	920					
	1070	●	●	●		
	1220		●	●	●	●
	1370			●	●	●
	1520					
	1670					
	1820					
	1970					
8FGJ/8FDJ35	920					
	1070	●	●	●		
	1220		●	●	●	●
	1370			●	●	●
	1520					
	1670					

INDEX: ● Available

LONG FORKBAR AND HIGH LOAD BACKREST

(January 2008)

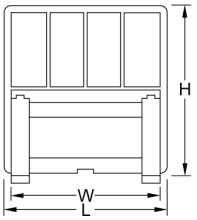

L: Outside width of load backrest
W: Length of forkbar
H: Height of load backrest
This picture is angle shape load backrest.

Unit: mm

Model	H	L *	1050	1150	1200	1300	1450	1600
		W	920	1020	1070	1170	1320	1470
8FG/8FD 10.15.18	920		●	●		●	●	●
	1070		●	●		●	●	●
	1220		❍	●		●	●	●
	1370		●					
	1520		●					
	1670		●					
	1820		●					
8FGK/8FDK20.25 8FG/8FD20.25	920			●		●	●	●
	1070			●		●	●	●
	1220			❍		●	●	●
	1370			●				
	1520			●				
	1670			●				
	1820			●				
8FGK/8FDK30 8FG/8FD30 8FGJ/8FDJ35	920				●	●	●	●
	1070				●	●	●	●
	1220				❍	●	●	●
	1370				●			
	1520				●			
	1670				●			
	1820				●			

INDEX: ❍ Standard / ● Available
NOTE: * Dimentions are angle shape load backrest
Plus 50 mm to the length of the forkbar when optional Flat Steel Type backrest is selected.

AVAILABILITY OF LPG FUEL SYSTEM CHART *(January 2008)*

(Common for Exclusive Type and Convertible Type)

Item	Model	8FG10	8FG15.18	8FGK20.25 8FG20.25	8FGK30 8FG30	8FGJ35
	Engine Model	4Y	4Y	4Y	4Y	4Y
Damper Assisted Swing Down Bracket		❍	❍	❍	❍	❍
LPG Fuel System Regulator		❍	❍	❍	❍	❍
LPG Fuel System with Drain-equipped Regulator (1)		●	●	●	●	●
Fine Filter		❍	❍	❍	❍	❍
Engine Speed Sensor LPG Cutoff Device		❍	❍	❍	❍	❍
Without Bracket		●	●	●	●	●
Cylinder 15 kg with Level Gauge		●	●	●	●	●
Without LPG Cylinder 15 kg		●	●	●	●	●
Cylinder 20 kg with Level Gauge		●	●	●	●	●
Without LPG Cylinder 20 kg		●	●	●	●	●
LPG Remaining Fuel Warning Devic		●	●	●	●	●
LPG Connector Valve		●	●	●	●	●

INDEX: ❍ Standard / ● Available

NOTE: (1) Selecting the 3-way catalytic converter system as an option causes the drain-epuipped regulator to be installed.

ENGINE PERFORMANCE CURVE (LP-GAS) *(January 2008)*

4Y Engine (1-2 Ton Series)

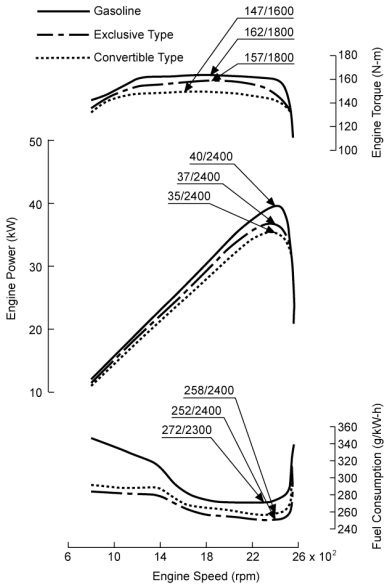

4Y Engine (3 Ton Series)

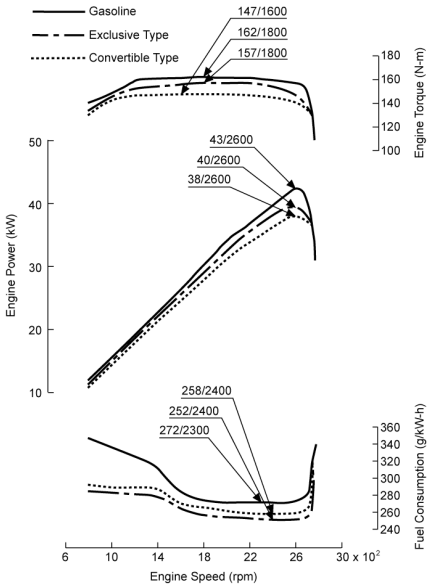

HIGH CAPACITY ALTERNATOR *(May 2009)*

Model		8FG/8FD10.15.18.20.25.30 8FGJ/8FDJ35
Standard	(V-A)	12-50 (12-60)
High Capacity	(V-A)	12-60 (12-70)

( ) for 4Y engine models.

TIRE AVAILABILITY

(May 2009)

Model	Tire Arrangement		Pneumatic Tire			
			Tire Size	Rim Size (Type)	J-Lug	Long Life (J-Lug)
8FG/8FD10	Front	Single	6.00-9-10PR	4.00Ex9DT (Divided)	❍	●
			6.50-10-10PR	5.00Fx10DT (Divided)	●	●
		Dual	4.50-12-8PR	3.50Dx12DC (Drop-Center)	●	●
	Rear		5.00-8-8PR	3.00x8DT (Divided)	❍	●
				3.00x8TB (Side-Ring)	●	●
8FG/8FD15.18	Front	Single	6.50-10-10PR	5.00Fx10DT (Divided)	❍	●
			21x8-9-10PR	6.00Ex9TB (Side-Ring)	●	●
		Dual	4.50-12-8PR	3.50Dx12DC (Drop-Center)	●	●
	Rear		5.00-8-8PR	3.00x8DT (Divided)	❍	●
				3.00x8TB (Side-Ring)	●	●
8FGK/8FDK20.25		Single	21x8-9-14PR	6.00Ex9 TB (Side-Ring)	❍	
	Rear		18x7-8-10PR	4.25x8 DT (Divided)	❍	
			18x7-8-16PR	4.33Rx8 TB (Side-Ring)	●	
8FG/8FD20.25	Front	Single	7.00-12-12PR	5.00Sx12DT (Divided)	❍	●
		Dual	5.50-15-8PR	4.50Ex15SDC (Drop-Center)	●	●
			7.00-12-12PR	5.00Sx12TB (Side-Ring)	●	●
	Rear		6.00-9-10PR	4.00Ex9DT (Divided)	❍	●
				4.00Ex9TB (Side-Ring)	●	●
8FGK/8FDK30	Front	Single	23x9-10-16PR	6.50Fx10 TB (Side-Ring)	❍	
	Rear		18x7-8-16PR	4.33Rx8 TB (Side-Ring)	❍	
8FG/8FD30	Front	Single	28x9-15-12PR	7.00Tx15IR (Side-Ring)	❍	●
		Dual	6.00-15-10PR	4.50Ex15SDC (Drop-Center)	●	●
			28x8-15-12PR	6.00Sx15IR (Side-Ring)	●	●
	Rear		6.50-10-10PR	5.00Fx10DT (Divided)	❍	●
				5.00Fx10TB (Side-Ring)	●	●
			6.50-10-12PR	5.00Fx10TB (Side-Ring)	●	●
8FGJ/8FDJ35	Front	Single	250-15-16PR	7.00Tx15 IR (Side-Ring)	❍	●
		Dual	6.00-15-10PR	4.50Ex15SDC (Drop-Center)	●	●
			28x8-15-12PR	6.00Sx15IR (Side-Ring)	●	●
	Rear		6.50-10-12PR	5.00Fx10TB (Side-Ring)	❍	●

INDEX: ❍ Standard / ● Available

Model	Tire Arrangement		Pneumatic-Shaped Cushion Tire			
			Tire Size	Rim Size (Type)	J-Lug	White Tire
8FG/8FD10	Front	Single	6.00-9	4.00Ex9DT (Divided)	●	●
		Dual	4.50-12	3.00Dx12SDC (Drop-Center)	●	
	Rear		5.00-8	3.00x8DT (Divided)	●	●
				3.00x8TB (Side-Ring)	●	
8FG/8FD15.18	Front	Single	6.50-10	5.00Fx10DT (Divided)	●	●
			21x8-9	6.00Ex9TB (Side-Ring)	●	
		Dual	4.50-12	3.00Dx12SDC (Drop-Center)	●	
	Rear		5.00-8	3.00x8DT (Divided)	●	●
				3.00x8TB (Side-Ring)	●	
8FGK/8FDK20.25		Single	21x8-9	6.00Ex9 TB (Side-Ring)	●	●
	Rear		18x7-8	4.25 x8 DT (Divided)	●	●
				4.33Rx8 TB (Side-Ring)	●	
8FG/8FD20.25	Front	Single	7.00-12	5.00Sx12DT (Divided)	●	●
		Dual	5.50-15	4.50Ex15SDC (Drop-Center)	●	
			7.00-12	5.00Sx12TB (Side-Ring)	●	
	Rear		6.00-9	4.00Ex9DT (Divided)	●	●
			6.50-10	5.00Fx10DT (Divided)	● 1)	● 1)
			6.00-9	4.00Ex9TB (Side-Ring)	●	
8FGK/8FDK30	Front	Single	23x9-10	6.50Fx10 TB (Side-Ring)	●	●
	Rear		18x7-8	4.33Rx8 TB (Side-Ring)	●	●
8FG/8FD30	Front	Single	28x9-15	7.00Tx15IR (Side-Ring)	●	●
		Dual	6.00-15	4.50Ex15SDC (Drop-Center)	●	
			7.00-15/6.00	6.00Sx15IR (Side-Ring)	●	
	Rear		6.50-10	5.00Fx10DT (Divided)	●	●
				5.00Fx10TB (Side-Ring)	●	
8FGJ/8FDJ35	Front	Single	250-15/7.00	7.00Tx15 IR (Side-Ring)	●	●
		Dual	6.00-15	4.50Ex15SDC (Drop-Center)	●	
			7.00-15/6.00	6.00Sx15IR (Side-Ring)	●	
	Rear		6.50-10	5.00Fx10TB (Side-Ring)	●	●

INDEX: ● Available
NOTE: 1) Not available on model 8FG/8FD20

MATCHING OPTIONS

(January 2016)

(Column figures refer to matching with to the items listed at left)

Item	Code		1	2	3	4	5	6	7	8	9	10	11	12	13	14	15	16	17	18	19	20	21	22	23	24	25	26	27	28	29	30	31	32	33	34	35	36	37	38	39	40	41	42	43	44	45	46	47	48	49	50	51	52	53	54	55	56	57	58	59	60	61	62	63	64	65	66	67	68	69	70	71	72	73	74	75	76	77	78	79	80	81	82	83	84	85	86	87	88	90	91	92	93	94
E.E.C. Spec. (Machinery Directive)	A10B	1																																																																																														
China Certification Spec.	A10R	2	X																																																																																												
Australian Spec.	A20B	3	X	X																																																																																											
Russian Spec.	A20C	4	X	X	X																																																																																										
Russian Low Profile Spec.	A20L	5	X	X	X	X																																																																																									
Korean Spec.	A20S	6	X	X	X	X	X																																																																																								
High Capacity Cooling Spec.	A26A	7						X																																																																																								
System of Active Stability	A41A	8																																																																																														
High Capacity Cooling Spec. (Paper Industry Spec.)	A60B	9						X	X																																																																																							
Cold Area Package	B01A	10	X		X	X	X	X																																																																																								
Low-noise Model	B11A	11							X		X																																																																																					
Rust-proof Model	B30H	12	X																																																																																												
Rust-proof Model (Fisherman Special)	B30J	13	X											X																																																																																
Rust-proof Parts (Nuts and Bolts)	B31B	14	X																																																																																												
LPG Fuel System Exclusive Type (Z4)	C00A	15	X		X	X	X	X				X																																																																												
LPG Fuel System Convertible Type (Z3)	C00B	16	X		X	X	X	X				X					X																																																																							
LPG Fuel System (Australian Spec.) (Z3)	C00D	17	X			X	X	X				X					X	X																																																																						
LPG Fuel System (New Zealand Spec.) (Z3)	C00L	18	X			X	X	X				X					X	X	X																																																																					
LPG Cylinder 20 kg w/ Level Gauge	C01D	19	X		X	X	X	X				X							X	X																																																																				
LPG Cylinder 15 kg w/ Level Gauge	C01I	20	X		X	X	X	X				X							X	X	X																																																																			
w/o LPG Cylinder 20 kg	C01N	21	X		X	X	X	X				X							X	X	X	X																																																																		
w/o LPG Cylinder 15 kg	C01P	22	X		X	X	X	X				X							X	X	X	X	X																																																																	
w/o LPG Cylinder Bracket	C03N	23	X		X	X	X	X				X							X	X	X	X	4	4																																																																
LPG Fuel System (Russian Spec.)	C04C	24	X		X	X	X	X										X		X	X	X	X		X	X																																																																
LPG Amine Proof Spec.	C04E	25	X		X	X	X	X				X					X		X	X					X																																																																
LPG Cylinder, Spare	C05A	26						X															X	X	X																																																																					
Cabin Modification for LPG Bracket	C06B	27						X																	X																																																																					
Fuel Tank Cap w/ Key	C09A	28															X																																																																																
Upswept Exhaust	C10A	29					X										6	6	X	X	6	6	6	6	6	6																																																																			
Catalytic Muffler	C11A	30																													X																																																																	
3-way Catalytic Converter System	C11D	31						X						X	X	X											X						X																																																															
Spark Guard Net	C12A	32																													X																																																																	
Pre-cleaner	C16A	33					X										1	1	1	1	1	1	1	1																																																																								
LPG Connector Valve	C20O	34						X											X	X																																																																												
Diesel Particulate Filter-II	C21A	35				X	X	X					X				X	X	X	X	X	X	X	X	X	X						X	X	X																																																												
w/o DPF AC Cable	C22B	36				X	X	X									X	X	X	X	X	X	X	X	X	X						X	X	X																																																												
LPG Fuel System w/ Drain-equipped Regulator	C14A	37						X											X							X					6		X				X	X																																																												
Beijing Emission Certified Diesel Engine	C25C	38	X		X	X	X	X				X					X	X	X	X	X	X	X	X	X	X	X	X	X				X			X	X	X	X																																																										
LPG Remaining Fuel Warning Device	C28A	39	X			X	X	X									X	X					X	X				6		X				X	X																																																												
1DZ-III (Low-emission Diesel Engine)	C31A	40			X	X	X					X					X	X	X	X	X	X	X	X	X	X		X	X				X			X			X		X																																																								
High-capacity Alternator	D05A	41	X					X				X																									X	X																																																									
High-capacity Battery	D20A	42				X	X					X																									7	7																																																									
w/o Intake Heater	D24N	43				X	X	X									X	X	X	X	X	X	X	X	X	X		X	X				X			X	X	X	X		X	X	X																																																							
Key-less Ignition Switch	D29A	44																																																																																														
Oil Clutch (Manual Transmission)	E01A	45	X					X					X												X																	X																																																								
2-stator T/C	E10G	46						X																																		X																																																					
Left Hand Shift Lever	E11A	47																																																																																														
Right Hand Shift Lever	E11B	48																																															X																																															
Anti-restart Ignition Key Switch	E26A	49																																												X																																																		
Hand Parking Brake	E33A	50	X																																																																																												
Mini Lever	E45A	51	X			X	X																					X																							X			X																																																
Joystick	E45B	52	X			X	X																					X																							X			X			X																																												
Vehicle-hoisting Hook	G16A	53					X										X	X	X	X												X					X																																																											
Suspension Seat w/ Damper	G40E	54	X				X																																																																																							
Swivel Seat	G41F	55																																																																																														
Floor Mat	G80A	56																																																																																														
Urethane Floor Mat	G80B	57																																																								X																																						
Deluxe Cabin	H00X	58	X				X	X					X	X	X	X	X	X	X	X																	X	X	X			X													8	8	X		8	X	X																																																	
w/o Overhead Guard Sheet	H01N	59																																																										X																																			
Canvas Cabin w/ Wiper and Washer	H02C	60	X				X						X	X	X	X	X	X	X	X	X	X	X	X	X													X														8	8	X		8			X	X																																																	
Front Windshield w/ Wiper and Washer	H02D	61	X				X						X	X	X																																														X	X	X																																		
Heater	H11A	62						X						X	X	X																					X	X						11																																																										
Heater w/ Defroster	H12A	63	X				X	X					X	X	X																					X	X																																																														
Cabin w/ Folding Door	H34A	64	X				X					X	X	X	X	X	X	X	X																		X														8	8	X		8			X	X																																																	
Inside-set Headlights	J04H	65																																																										X		X	X			X																																				
Yellow Strobe Light on OHG (Key ON Position)	J19I	66					X																																																																																									
Yellow Strobe Light on OHG (Reverse Position)	J19S	67					X																																																																																									
Rear Working Light (Selective Lighting Condition)	J26C	68																																																					X																																											
Two Rear Working Lights (Selective Lighting Condition)	J26D	69																													X					X																					X					X		X				X																																				
Radiator Screen	K19A	70				X	X																																																					X		X				X																																				
Back-up Buzzer	K21D	71																																																																																														
Back-up Buzzer With On-off Switch	K21K	72																																																																							X																						
Tilt Cylinder Hole Boots	K35A	73											10																																																X		X				X																																				
Travel and Load Handling Control	K39A	74						X																																			11																																																					
Speedometer	L10A	75								X																								X																					X	X																								X																					
Multifunction Display	L26A	76																																																																												X																			
Deluxe Multifunction Display	L26B	77																																																																												X	X																		
Fully Oil Charged Lift Cylinder	M09A	78												X	X																																																																															
w/o Fork Set	M20N	79																																																																																														
Fork Noise Reducer	M22B	80																																																																																X															
High Load Backrest (Flat Steel Type)	M33A	81			X									X	X																																																																																	
w/o Backrest	M40N	82																																																																																														
Document Box	S04A	83					X																																													X	X			X																																												
Yellow Strobe Light Wiring (Key ON Position)	S19A	84	X				X																																																									X	X																															
Yellow Strobe Light Wiring (Reverse Position)	S19B	85	X				X																																																									X	X																															
Body Color (431 Orange)	R00R	86																																			X	X																							X						X																																			
Mast Rust-proof Painting	R50A	87													X																																																																																	
Backrest Rust-proof Painting	R51A	88																																																																																		X												
Front Combination Lights	J20B	90																																																										X							X																																
Headlights w/ Front Combination Lights	J24K	91																																																																																											X				
LED Headlights	J24L	92																																																										X							X																													X			
LED Rear Working Light (Selective Lighting Condition)	J26I	93																																																					X														X	X																												
LED Two Rear Working Lights (Selective Lighting Condition)	J26J	94																													X					X																			X					X		X				X				X	X																												X	

INDEX: X Not available.

1. The combination of LPG Cylinder Bracket and Pre-cleaner are not possible on 8FGK/8FDK20.25.30 models.
2. The Heater w/ Defroster cannot be combined with Front Windshield w/ Wiper and Washer.
3. The Heater w/ Defroster cannot be combined with Attachment Relief Valve (Pressure Reducing Valve).
4. The w/o LPG Cylinder Bracket is the without LPG cylinder specification (Must specify w/o LPG Cylinder 20 kg, w/o LPG Cylinder 15 kg).
5. The Rear Working Light (Selective Lighting Condition) cannot be combined with Upswept Exhaust + Pre-cleaner or Deluxe Cabin or Cabin w/ Folding Door or Canvas Cabin w/ Wiper and Sasher.
6. The Upswept Exhaust and LPG can be combined on 8FG/8FD25.30.J35.
7. The High-capacity Battery cannot be combined with Diesel Particulate Filter-II for the 1DZ-II model.
8. Cabin-equipped vehicles cannot be combined with the Swivel Seat or with the Mini Lever or Joystick.
9. Floor Mat is standard equipment on the Deluxe Cabin.
10. Cannot be combined with Low-noise Model (2Z engine models only).
11. Cannot be combined with High-capacity Battery for Diesel engine models.

NOTE: For other matching please consult us.